Fehlermeldungen HATZ- Motor- CM 1650, Version 05-2021
Error-Codes HATZ- Engine- CM 1650- Version 05-2021

Component	SPN	FMI	P- Nummer P-Code	FaultCheckDescription (Englisch)	FaultCheckDescription (Deutsch)
Oil Pressure, Motoröldruck	100	0	P0521	Maximum oil pressure error in plausibility check	Maximaler Öldruckfehler bei der Plausibilitätsprüfung
Oil Pressure, Motoröldruck	100	1	P0524	Minimum oil pressure error in plausibility check	Minimaler Öldruckfehler bei der Plausibilitätsprüfung
Oil Pressure Sensor, Öldruckschalter	100	3	P0523	SRC high for oil pressure sensor	SRC hoch für Öldrucksensor
Oil Pressure Sensor, Öldruckschalter	100	4	P0522	SRC low for Oil pressure sensor	SRC niedrig für Öldrucksensor
Brake System	1045	0	P0571	Sig Error for Main Brake	Sig Fehler für Hauptbremse
Brake System	1046	2	P0703	Sig Error for Redundant Brake	Sig-Fehler für redundante Bremse
Intercooler Downstream Temperature	105	0	P007A	Physical Range Check high for Charged Air cooler down stream temperature	Physikalischer Bereich Hoch auf stromabwärtige Temperatur des Ladeluftkühlers prüfen
Intercooler Downstream Temperature	105	1	P007A	Physical Range Check low for Charged Air cooler down stream temperature	Physikalischer Bereich Niedrig prüfen, ob die Temperatur des Ladeluftkühlers nachgeschaltet ist
PFM	105	9	P007B	initialization error for SENT transmission for Charged Air cooler down stream temperature	Initialisierungsfehler für die SENT-Übertragung für die Downstream-Temperatur des Ladeluftkühlers
PFM	105	2	P007E	sensor internal diagnosis for Charged Air cooler down stream temperature, SENT	Sensorinterne Diagnose für stromabwärtige Temperatur des Ladeluftkühlers, SENT
Air Filter, Luftfilter	107	14	P008F	Error path for Clog Detection in Air filter	Fehlerpfad für Verstopfungserkennung im Luftfilter
Air Filter Differential Pressure Sensor B31. Luftfilter- Differenzdrucksensor B31.	107	3	P0120	SRC High for Controller Mode Switch	SRC High für Controller Mode Switch
Air Filter Differential Pressure Sensor B31. Luftfilter- Differenzdrucksensor B31.	107	4	P0121	SRC low for Controller Mode Switch	SRC niedrig für Controller Mode Switch
Metering Unit	1076	5	P0251	open load of metering unit output	offene Last des Ausgangs der Dosiereinheit
Metering Unit,	1076	12	P0252	over teperature of device driver of metering unit	Übertemperatur des Gerätetreibers der Dosiereinheit

Metering Unit	**1076**	**18**	**P0258**	short circuit to ground of metering unit output	Kurzschluss nach Masse des Ausgangs der Dosiereinheit
Ambient Pressure	**108**	**0**	**P2227**	Ambient air pressure sensor range chack max-error	Bereich des Umgebungsluftdrucksensors auf maximalen Fehler prüfen
Ambient Pressure	**108**	**1**	**P2227**	Ambient air pressure sensor range check min-error	Überprüfung des Bereichs des Umgebungsluftdrucksensors auf Min-Fehler
Ambient Pressure Sensor	**108**	**3**	**P2229**	fault check max signal range violated for ambient air pressure sensor	Fehlerprüfung Maximaler Signalbereich für Umgebungsluftdrucksensor verletzt
Ambient Pressure Sensor	**108**	**4**	**P2228**	fault check min signal range violated for ambient air pressure sensor	Fehlerprüfung min. Signalbereich für Umgebungsluftdrucksensor verletzt
Coolant Temperature, Kühlwassertemperatur	**110**	**17**	**P0116**	defect fault check for Absolute plausibility test	Fehlerprüfung für absolute Plausibilitätsprüfung
Coolant Temperature, Kühlwassertemperatur	**110**	**18**	**P0116**	defect fault check for dynamic plausibility test	Fehlerprüfung für dynamische Plausibilitätsprüfung
Coolant Temperature, Kühlwassertemperatur	**110**	**16**	**P0217**	Engine coolant temperature too high plausibility error	Motorkühlmitteltemperatur zu hoher Plausibilitätsfehler
Coolant Temperature, Kühlwassertemperatur	**110**	**0**	**P0217**	Physical Range Check high for CEngDsT	Physikalischer Bereich Hoch auf CEngDsT prüfen
Coolant Temperature, Kühlwassertemperatur	**110**	**1**	**P050E**	Physical Range Check low for CEngDsT	Physikalischer Bereich Niedrig auf CEngDsT prüfen
Coolant Temperature Sensor	**110**	**3**	**P0118**	SRC High for Engine coolant temperature(down stream)	SRC Hoch für Motorkühlmitteltemperatur (stromabwärts)
Coolant Temperature Sensor	**110**	**4**	**P0117**	SRC low for Engine coolant temperature(down stream)	SRC niedrig für Motorkühlmitteltemperatur (stromabwärts)
Injection Cut Off	**1109**	**11**	**P0606**	Injection cut off demand (ICO) for shut off coordinator	ICO (Injection Cut Off Demand) für den Abschaltkoordinator
Coolant Level B34 implausible signal, Kühlwasserstand B34 unplausibles Signal	**111**	**17**	**P00F1**	Implausible signal from cooling water level sensor B34 in the expansion tank. Electrical fault or fault in sensor B34.	Unplausibles Signal vom Kühlwasserstandsgeber B34 im Ausgleichsbehälter. Elektrischer Fehler oder Fehler im Geber B34.
ECU Temperature	**1136**	**16**	**P0669**	Diagnostic Fault Check for Physical Signal above maximum limit	Diagnosefehler Auf physikalisches Signal oberhalb der Höchstgrenze prüfen
ECU Temperature	**1136**	**18**	**P0668**	Diagnostic Fault Check for Physical Signal below minimum limit	Diagnosefehler Überprüfung auf physikalisches Signal unterhalb der Mindestgrenze
ECU Temperature Sensor	**1136**	**0**	**P0666**		

ECU Temperature Sensor	**1136**	**1**	**P0667**		
Pressure Control Valve	**1244**	**5**	**P3028**	open load of pressure control valve output	offene Last des Druckregelventilausgangs
Pressure Control Valve	**1244**	**12**	**P3029**	over teperature of device driver of pressure control valve	Übertemperatur des Gerätetreibers des Druckregelventils
Pressure Control Valve	**1244**	**16**	**P302A**	short circuit to battery of pressure control valve output	Kurzschluss zur Batterie des Druckregelventilausgangs
Pressure Control Valve	**1244**	**18**	**P302B**	short circuit to ground of the pressure control valve output	Kurzschluss nach Masse des Ausgangs des Druckregelventils
PFM	**132**	**13**	**P0100**	Error path of the offset diagnosis of the PFM differential pressure sensor in bank 1	Fehlerpfad der Offsetdiagnose des PFM-Differenzdrucksensors in Bank 1
PFM	**132**	**0**	**P0100**	Error path of the upper out-of- range diagnosis of the PFM differential pressure sensor in bank 1	Fehlerpfad der oberen Außerbereichsdiagnose des PFM-Differenzdrucksensors in Bank 1
PFM	**132**	**1**	**P0100**	Error path of the lower out-of- range diagnosis of the PFM differential pressure sensor in bank 1	Fehlerpfad der unteren Außerbereichsdiagnose des PFM-Differenzdrucksensors in Bank 1
PFM	**132**	**2**	**P0100**	Error path to indicate internal errors of the PFM differential pressure sensor in bank 1	Fehlerpfad zur Anzeige interner Fehler des PFM- Differenzdrucksensors in Bank 1
PFM	**132**	**20**	**P0100**	Error path of the upper physical range diagnosis of the PFM air mass flow signal in bank 1	Fehlerpfad der Diagnose des oberen physikalischen Bereichs des PFM-Luftmassenstromsignals in Bank 1
PFM	**132**	**21**	**P0100**	Error path of the lower physical range diagnosis of the PFM air mass flow signal in bank 1	Fehlerpfad der Diagnose des unteren physikalischen Bereichs des PFM-Luftmassenstromsignals in Bank 1
Rail Pressure Sensor. Raildrucksensor.	**157**	**3**	**P0193**	Sensor voltage above upper limit	Sensorspannung über der Obergrenze
Rail Pressure Sensor. Raildrucksensor	**157**	**4**	**P0192**	Sensor voltage below lower limit	Sensorspannung unterhalb der Untergrenze
Alternator Monitoring . Überwachung Generator (Lichtmaschine)	**167**	**7**	**P013E**	Plausibility check for input signal for monitoring the alternator	Plausibilitätsprüfung für Eingangssignal zur Überwachung der Lichtmaschine
Battery/ Electric Supply. Batteriespannungn zu niedrig. Oder Fehler in der Bordnetzspannung.	**168**	**3**	**P0563**	Diagnostic Fault Check for Signal Range Max Check of Battery Voltage	Diagnosefehlerprüfung auf Signalbereich Max. Prüfung der Batteriespannung

Battery/Electric Supply Batterie oder Spannung im Bordnetz zu niedrig.	**168**	**4**	**P0562**	Diagnostic Fault Check for Signal Range Min Check of Battery Voltage	Diagnosefehlerprüfung auf Signalbereich Min. Überprüfung der Batteriespannung
Fuel Low Pressure Temperature	**174**	**0**	**P0181**	Physical Range Check high for fuel temperature	Physikalischer Bereich Hoch auf Kraftstofftemperatur prüfen
Fuel Low Pressure Temperature	**174**	**1**	**P0181**	Physical Range Check low for fuel temperature	Physikalischer Bereich Niedrig auf Kraftstofftemperatur prüfen
Fuel Low Pressure Temperature Sensor	**174**	**3**	**P0183**	SRC high for fuel temperature sensor	SRC hoch für Kraftstofftemperatursensor
Fuel Low Pressure Temperature Sensor	**174**	**4**	**P0182**	SRC low for fuel temperature sensor	SRC niedrig für Kraftstofftemperatursensor
Oil Temperature, Motoröltemperatur zu hoch.	**175**	**2**	**P0199**	Plausibility check for Oil Temperature	Plausibilitätsprüfung für Öltemperatur
Oil Temperature, Motoröltemperatur zu hoch.	**175**	**13**	**P0195**	Oil temperature too high plausibility error	Öltemperatur zu hoher Plausibilitätsfehler
OilTemperature, Motoröltemperatur zu hoch.	**175**	**0**	**P0196**	Physical Range Check high for Oil Temperature	Physikalischer Bereich Hoch auf Öltemperatur prüfen
Oil Temperature, Motoröltemperatur zu hoch.	**175**	**1**	**P0196**	Physical Range Check low for Oil Temperature	Physikalischer Bereich Niedrig auf Öltemperatur prüfen
Oil Temperature Sensor	**175**	**3**	**P0198**	SRC High for Oil Temperature	SRC hoch für Öltemperatur
Oil Temperature Sensor	**175**	**4**	**P0197**	SRC low for Oil Temperature	SRC niedrig für Öltemperatur
Engine Protection. Motorschutz,	**1769**	**11**	**P0219**	Overspeed detection in component engine protection	Überdrehzahlerkennung im Komponentenmotorschutz
Camshaft Speed Sensor, Nockenwellensensor.	**190**	**8**	**P0344**	DFC for camshaft signal diagnose - disturbed signal	DFC für Nockenwellensignaldiagnose - gestörtes Signal. Kabelunterbrechung oder Kurzschluss.
Camshaft Speed Sensor, Nockenwellensensor.	**190**	**12**	**P0340**	DFC for camshaft signal diagnose - no signal	DFC für Nockenwellensignaldiagnose - kein Signal. Kabelunterbrechung oder Kurzschluss.
Camshaft Speed Sensor, Kurbelwellensensor	**190**	**2**	**P0016**	DFC for camshaft offset angle exceeded	DFC für Nockenwellenversatzwinkel überschritten
Crankshaft Speed Sensor, Kurbelwellensensor	**190**	**9**	**P0336**	DFC for crankshaft signal diagnose - disturbed signal	DFC für Kurbelwellensignaldiagnose - gestörtes Signal. Kabelunterbrechung oder Kurzschluss.
Crankshaft Speed Sensor, Kurbelwellensensor.	**190**	**18**	**P2617**	DFC for crankshaft signal diagnose - no signal	DFC für Kurbelwellensignaldiagnose - kein Signal. Kabelunterbrechung oder Kurzschluss.

CAN. CAN- Bus.	**22000**	**14**	**U0073**	error passive CAN A	Fehler passiv CAN A.
CAN. CAN- Bus.	**22001**	**15**	**U0074**	error passive CAN B	Fehler passiv CAN B.
EGR Valve, Abgas- Rückführungsventil (AGR)	**27**	**17**	**P049D**		
EGR Valve, Abgas- Rückführungsventil (AGR)	**2791**	**15**	**P049E**		
EGR Valve, , Abgas- Rückführungsventil (AGR)	**2791**	**18**	**P049C**		Temperatur über Grenzwert.
EGR Valve, Abgas- Rückführungsventil (AGR)	**2791**	**16**	**P049B**		
EGR Valve, , Abgas- Rückführungsventil (AGR)	**2791**	**1**	**P042F**		
EGR Valve, , Abgas- Rückführungsventil (AGR)	**2791**	**0**	**P042E**		
EGR Valve, Abgas- Rückführungsventil (AGR)	**2791**	**20**	**P213B**		
EGR Valve, Abgas- Rückführungsventil (AGR)	**2791**	**21**	**P213B**		
EGR Valve, Abgas- Rückführungsventil (AGR)	**2791**	**13**	**P0490**		
EGR Valve, Abgas- Rückführungsventil (AGR)	**2791**	**14**	**P0489**		
ECU Internal	**2802**	**14**	**P062F**	EEP Read Error based on the error in reading blocks from memory media	EEP-Lesefehler basierend auf dem Fehler beim Lesen von Blöcken von Speichermedien
ECU Internal	**2802**	**12**	**P062F**	EEP Write Error based on the error in storing the blocks in memory media	EEP-Schreibfehler basierend auf dem Fehler beim Speichern der Blöcke auf Speichermedien
Particulate Filter Upstream Temperature, Temperatur des Partikelfilters vor dem Filter	**3242**	**0**	**P2481**	Physical Range Check high for particulate filter upstream temperature sensor	Physikalischer Bereich Hoch auf Partikelfilter vor dem Temperatursensor prüfen
Particulate Filter Upstream Temperature, Temperatur des Partikelfilters vor dem Filter	**3242**	**1**	**P2481**	Physical Range Check low for particulate filter upstream temperature sensor	Physikalischer Bereich Niedrig auf Partikelfilter vor dem Temperatursensor prüfen
Particulate Filter Upstream Temperature, Temperatur des Partikelfilters vor dem Filter	**3244**	**2**	**P2484**	Diagnostic fault check for Plausibility errors in Particle filter upstream temperature	Diagnosefehlerprüfung auf Plausibilitätsfehler in der Vorlauftemperatur des Partikelfilters
Particulate Filter Upstream Temperature Sensor, Temperatur des Partikelfilters vor dem Filter	**3244**	**3**	**P2471**	Diagnostic fault check for Signal Range Check max error for the temperature sensor installed at the upstream of particulate filter.	Diagnosefehlerprüfung für Signalbereich maximaler Fehler für den Temperatursensor prüfen, der vor dem Partikelfilter installiert ist.

Particulate Filter Upstream Temperature Sensor, Temperatur des Partikelfilters vor dem Filter	**3244**	**4**	**P2470**	Diagnostic fault check for Signal Range Check min error for the temperature sensor installed at the upstream of particulate filter.	Diagnosefehlerprüfung für Signalbereich Überprüfen Sie den minimalen Fehler für den Temperatursensor, der vor dem Partikelfilter installiert ist.
Particulate Filter Differential Pressure Sensor Hoseline, Partikelfilter-Differenzdrucksensor- Schlauchleitung oder Sensor DPF, B36.	**3251**	**13**	**P2453**	Fault check for Hoseline connection	Fehlerprüfung für Hoseline- Verbindung
Particulate Filter Differential Pressure Sensor, B36. Differenzdrucksensor DPF, B36.	**3251**	**2**	**P2453**	Fault check for the pressure sensor plausibility	Fehlerprüfung auf Plausibilität des Drucksensors
Particulate Filter Monitoring. Überwachung vom Partikelfilter.	**3253**	**0**	**P2453**	Diagnostic fault check for maximum pressure differential charecterstics	Diagnosefehlerprüfung auf maximale Druckdifferenzcharakteristik. Differenzdruck zu hoch!
Particulate Filter Monitoring. Überwachung vom Partikelfilter.	**3253**	**1**	**P2453**	Diagnostic fault check for minimum pressure differential charecterstics	Diagnosefehlerprüfung auf Mindestdruckdifferenzcharakteristik
Particulate Filter Monitoring. Überwachung vom Partikelfilter.	**3253**	**2**	**P244A**	Check for minimum exhaust gas differential pressure for high load	Auf minimalen Abgasdifferenzdruck bei hoher Last prüfen
Particulate Filter Monitoring. Überwachung vom Partikelfilter.	**3253**	**12**	**P2453**	Diagnostic fault check for min deviation measure from simulated and measured particulate mass	Diagnosefehlerprüfung zur Messung der minimalen Abweichung von der simulierten und gemessenen Partikelmasse
Sensor Supply Monitoring 1. Überwachung der Sensorversorgung 1	**3509**	**2**	**P0641**	Voltage fault at Sensor supply 1	Spannungsfehler an der Sensorversorgung 1
Sensor Supply Monitoring 2. Überwachung der Sensorversorgung 2	**3510**	**2**	**P0651**	Voltage fault at Sensor supply 2	Spannungsfehler an der Sensorversorgung 2
Sensor Supply Monitoring 3. Überwachung der Sensorversorgung 3	**3511**	**2**	**P0697**	Voltage fault at Sensor supply 3	Spannungsfehler an der Sensorversorgung 3
Particulate Filter Differential Pressure. DPF- Diffferenzdruck.	**3609**	**16**	**P244B**	Enhanced SRC high for PFlt differential pressure sensor	Verbesserter SRC-High für PFlt-Differenzdrucksensor
Particulate Filter Differential Pressure. DPF- Differnzdruck.	**3609**	**18**	**P244A**	Enhanced SRC low for PFlt differential pressure sensor	Verbesserter SRC-Tiefstand für PFlt-Differenzdrucksensor
Particulate Filter Differential Pressure Sensor B36. . Differenzdrucksensor DPF B36.	**3609**	**3**	**P2455**	SRC High for PFlt differential pressure sensor	SRC High für PFlt- Differenzdrucksensor

Particulate Filter Differential Pressure Sensor B36. Differenzdrucksensor DPF B36.	**3609**	**4**	**P2454**	SRC low for PFlt differential pressure sensor	SRC niedrig für PFlt-Differenzdrucksensor
Particulate Filter Monitoring. Überwachung vom Partikelfilter.	**4781**	**0**	**P242F**	To check if volume of Ash load has exceeded the limit	Um zu überprüfen, ob das Volumen der Ascheladung den Grenzwert überschritten hat
Particulate Filter Monitoring. Überwachung vom Partikelfilter.	**4781**	**1**	**P2002**	Diagnostic fault check for particulate filter efficiency	Diagnosefehlerprüfung auf Partikelfilterwirkungsgrad
Particulate Filter Monitoring. Überwachung vom Partikelfilter.	**4781**	**8**	**P2459**	Diagnostic fault check for too frequent regeneration of the particulate filter	Diagnosefehlerprüfung auf zu häufige Regeneration des Partikelfilters
Particulate Filter Monitoring. Überwachung vom Partikelfilter.	**4781**	**31**	**P24A2**	Diagnostic fault check for incomplete regeneration of particulate filter	Diagnosefehlerprüfung auf unvollständige Regeneration des Partikelfilters
Particulate Filter Monitoring	**4781**	**16**	**P243F**	Diagnostic fault check for pressure differential charecterstics	Diagnosefehlerprüfung auf Druckdifferenzcharakteristik
Particulate Filter Monitoring. Überwachung vom Partikelfilter.	**4781**	**18**	**P24A4**	Diagnostic fault check for pressure differential charecterstics	Diagnosefehlerprüfung auf Druckdifferenzcharakteristik
Particulate Filter Monitoring. Überwachung vom Partikelfilter.	**4781**	**13**	**P2463**	Diagnostic fault check for Maximum soot mass	Diagnosefehlerprüfung auf maximale Rußmasse
Oxidation Catalyst Heater Plugs.	**4791**	**5**	**P04F2**	DFC for open circuit to ground, K20 line for the DOC Heater feedback relay diagnosis line	DFC für Unterbrechung nach Masse, K20-Leitung für die Diagnoseleitung des DOC-Heizungsrückkopplungsrelais
Oxidation Catalyst Heater Plugs	**4791**	**6**	**P04F2**	DFC for short circuit to ground, K20 line for the DOC Heater feedback relay diagnosis line	DFC für Kurzschluss nach Masse, K20-Leitung für die Diagnoseleitung des DOC-Heizungsrückkopplungsrelais
Oxidation Catalyst Heater Plugs	**4791**	**3**	**P04F3**	DFC for open circuit to ground, K59 line for the DOC Heater feedback relay diagnosis line	DFC für Unterbrechung nach Masse, K59-Leitung für die Diagnoseleitung des DOC-Heizungsrückkopplungsrelais
Oxidation Catalyst Heater Plugs	**4791**	**4**	**P04F3**	DFC for short circuit to ground, K59 line for the DOC Heater feedback relay diagnosis line	DFC für Kurzschluss nach Masse, K59-Leitung für die Diagnoseleitung des DOC-Heizungsrückkopplungsrelais
Oxidation Catalyst Heater Relay	**4793**	**5**	**P04F4**	No load error	Kein Ladefehler
Oxidation Catalyst Heater Relay	**4793**	**12**	**P04F8**	Over temperature error	Übertemperaturfehler
Oxidation Catalyst Heater Relay	**4793**	**3**	**P04F6**	Short circuit to battery error	Kurzschluss zum Batteriefehler
Oxidation Catalyst Heater Relay	**4793**	**4**	**P04F4**	Short circuit to ground error	Kurzschluss nach Masse Fehler

Throttle Valve. Drosselklappe oder Ansteuerung Drosselklappe.	**51**	**1**	**P0638**		
Throttle Valve. Drosselklappe oder Ansteuerung Drosselklappe.	**511**	**12**	**P2101**		
Throttle Valve. Drosselklappe oder Ansteuerung Drosselklappe.	**511**	**3**	**P210D**		
Throttle Valve. Drosselklappe oder Ansteuerung Drosselklappe.	**511**	**4**	**P210C**		
Throttle Valve. Drosselklappe oder Ansteuerung Drosselklappe.	**512**	**12**	**P2101**		
Throttle Valve. Drosselklappe oder Ansteuerung Drosselklappe.	**515**	**0**	**P0638**		
PFM	**516097**	**8**	**P2430**	Error path to display communication errors of the 2nd SENT line of the PFM sensor in bank 1	Fehlerpfad zur Anzeige von Kommunikationsfehlern der 2. SENT-Leitung des PFM-Sensors in Bank 1
PFM	**516097**	**0**	**P2430**	Error path of electrical line hi diagnosis of the 2nd SENT line of the PFM sensor in bank 1	Fehlerpfad der elektrischen Leitung bei Diagnose der 2. SENT-Leitung des PFM-Sensors in Bank 1
PFM	**516097**	**1**	**P2430**	Error path of electrical line low diagnosis of the 2nd SENT line of the PFM sensor in bank 1	Fehlerpfad der elektrischen Leitung niedrig Diagnose der 2. SENT- Leitung des PFM-Sensors in Bank 1
PFM	**516098**	**19**	**P2430**	Error path to display communication errors of the SENT line of the PFM sensor in bank 1	Fehlerpfad zur Anzeige von Kommunikationsfehlern der SENT-Leitung des PFM-Sensors in Bank 1
PFM	**516098**	**0**	**P2430**	Error path of electrical line hi diagnosis of the SENT line of the PFM sensor in bank 1	Fehlerpfad der elektrischen Leitung bei Diagnose der SENT-Leitung des PFM-Sensors in Bank 1
PFM	**516098**	**1**	**P2430**	Error path of electrical line low diagnosis of the SENT line of the PFM sensor in bank 1	Fehlerpfad der niedrigen Diagnose der elektrischen Leitung der SENT- Leitung des PFM-Sensors in Bank 1
CAN. CAN- Bus.	**522023**	**9**	**U1171**	Timeout Error of CAN-Receive- Frame TSC1PE	Timeout-Fehler des CAN-Receive-Frame TSC1PE

Air Control Governor B32. Luftmassenmesser B32.	**522056**	**9**	**P02E1**	Error case for SlowResponse of the air mass in case of a negative gradient of the air mass setpoint	Fehlerfall für SlowResponse der Luftmasse bei negativem Gradienten des Luftmassensollwerts
Air Control Governor B32. Luftmassenmesser B32.	**522056**	**10**	**P02E1**	Error case for SlowResponse of the air mass in case of a positive gradient of the air mass setpoint	Fehlerfall für SlowResponse der Luftmasse bei positivem Gradienten des Luftmassensollwerts
Air Control Governor B32. Luftmassenmesser B32.	**522057**	**0**	**P0402**	Status of diagnostic fault check for maximum airmass governor deviation	Status der Diagnosefehlerprüfung auf maximale Abweichung des Luftmassenreglers
Air Control Governor B32. Luftmassenmesser B32.	**522057**	**1**	**P0401**	Status of diagnostic fault check for minimum airmass governor deviation	Status der Diagnosefehlerprüfung auf minimale Abweichung des Luftmassenreglers
High Pressure System. Raildruck Abweichung. Raildruck zu hoch.	**523037**	**0**	**P052E**	maximum positive deviation of rail pressure exceeded	maximale positive Abweichung des Raildrucks überschritten
High Pressure System. Raildruck Abweichung, Raildruck zu niedrig.	**523040**	**0**	**P052E**	maximum negative rail pressure deviation with closed pressure control valve exceeded	maximale negative Raildruckabweichung bei geschlossenem Druckregelventil überschritten
High Pressure System. Raildruck Abweichung. Raildruck zu hoch.zu hoch.	**523042**	**0**	**P052E**	maximum rail pressure exceeded (second stage)	maximaler Raildruck überschritten (zweite Stufe)
High Pressure System. Raildruck Abweichung, Raildruck zu hoch.	**523043**	**0**	**P052E**	maximum rail pressure exceeded	maximaler Raildruck überschritten
Injection System. Einspritzsystem Injektoren Bank A	**523350**	**4**	**P2146**	Short circuit of the power stage high-side (bank error)	Kurzschluss der Leistungsstufe High-Side (Bankfehler A)
Injection System. Einspritzsystem Injektoren Bank B	**523352**	**4**	**P2149**	Short circuit of the power stage high-side (bank error)	Kurzschluss der Leistungsstufe High-Side (Bankfehler B)
CAN. CAN- Bus.	**523605**	**9**	**U1169**	Timeout Error of CAN-Receive- Frame TSC1AE	Timeout-Fehler des CAN-Receive-Frame TSC1AE
High Pressure System. High Pressure System. Raildruck Abweichung, Raildruck zu hoch.	**523613**	**0**	**P0087**	maximum positive deviation of rail pressure exceeded	maximale positive Abweichung des Raildrucks überschritten
High Pressure System. High Pressure System. Raildruck Abweichung, Raildruck zu hoch.	**523613**	**16**	**P0088**	maximum rail pressure exceeded	maximaler Raildruck überschritten

Ambient Pressure Sensor. Umgebungsluftdrucksensor (Ambient-Sensor).	**108**	**2**	**P222F**	Ambient air pressure sensor sensor error by component self diagnosis	Sensorfehler des Umgebungsluftdrucksensors durch Selbstdiagnose der Komponenten
Glow Plugs. Glühkerzen	**523676**	**14**	**P0383**	DFC for T30 missing error in GCU- T	DFC für T30 fehlt Fehler in GCU-T
Glow Plugs. Glühkerzen	**523676**	**12**	**P0102**	DFC for glow module error in GCU-T	DFC für Glühmodulfehler in GCU-T
Exhaust Gas Temperature Monitoring. Überwachung der Abgastemperatur	**523961**	**3**	**P0546**	Diagnostic Fault Check for enhanced SRC-Max of First exhaust gas temperature	Diagnosefehler auf verbesserte SRC-Max der ersten Abgastemperatur prüfen
Exhaust Gas Temperature Monitoring. Überwachung der Abgastemperatur	**523961**	**4**	**P0545**	Diagnostic Fault Check for enhanced SRC-Min of First exhaust gas temperature	Diagnosefehler auf verbesserte SRC-Min der ersten Abgastemperatur prüfen
Exhaust Gas Temperature Monitoring. Überwachung der Abgastemperatur	**523962**	**3**	**P0549**	Diagnostic Fault Check for enhanced SRC-Max of Second exhaust gas temperature	Diagnosefehler auf verbesserte SRC-Max der zweiten Abgastemperatur prüfen
Exhaust Gas Temperature Monitoring. Überwachung der Abgastemperatur	**523962**	**4**	**P0548**	Diagnostic Fault Check for enhanced SRC-Min of Second exhaust gas temperature	Diagnosefehler auf verbesserte SRC-Min der zweiten Abgastemperatur prüfen
Oxidation Catalyst Monitoring. Überwachung des Oxidationskatalysators	**524059**	**1**	**P0420**	Diagnostic fault check for characteristic of OxiCat	Diagnosefehlerprüfung auf OxiCat-Charakteristik
ECU Internal	**524098**	**12**	**P0607**	Diagnostic fault check to report "WDA active" due to errors in query-/response communication	Diagnosefehlerprüfung zur Meldung "WDA aktiv" aufgrund von Fehlern in der Abfrage- / Antwortkommunikation
ECU Internal	**524099**	**12**	**P0607**	Diagnostic fault check to report "ABE active" due to undervoltage detection	Diagnosefehlerprüfung zur Meldung "ABE aktiv" aufgrund der Unterspannungserkennung
ECU Internal	**524100**	**12**	**P0607**	Diagnostic fault check to report "ABE active" due to overvoltage detection	Diagnosefehlerprüfung zur Meldung "ABE aktiv" aufgrund von Überspannungserkennung
ECU Internal	**524101**	**12**	**P0607**	Diagnostic fault check to report "WDA/ABE active" due to unknown reason	Diagnosefehlerprüfung zur Meldung "WDA / ABE aktiv" aus unbekanntem Grund
High Pressure System. CR- Hochdruck-System, Leckagen.	**524104**	**0**	**P0093**	leakage is detected based on fuel quantity balance	Leckagen werden basierend auf der Kraftstoffmengenbilanz erkannt
High Pressure System. CR-Hochdrucksystem.	**524105**	**0**	**P0088**	maximum negative rail pressure deviation with metering unit on lower limit is exceeded	Die maximale negative Abweichung des Raildrucks mit der Dosiereinheit an der unteren Grenze wird überschritten

ECU Internal	**524120**	**14**	**P0607**	Visibility of SoftwareResets in DSM	Sichtbarkeit von SoftwareResets in DSM
ECU Internal	**524121**	**14**	**P0607**	Visibility of SoftwareResets in DSM	Sichtbarkeit von SoftwareResets in DSM
ECU Internal	**524122**	**14**	**P0607**	Visibility of SoftwareResets in DSM	Sichtbarkeit von SoftwareResets in DSM
ECU Internal	**524131**	**12**	**P060C**	CY327 SPI Communication Error	CY327 SPI-Kommunikationsfehler
Particulate Filter Monitoring. Überwachung des Oxidationskatalysators	**524137**	**0**	**P2459**	Diagnostic fault check for maximum number of regenerations of the particulate filter by the driver	Diagnosefehlerprüfung auf maximale Anzahl von Regenerationen des Partikelfilters durch den Fahrer
Particulate Filter Monitoring. Überwachung des Oxidationskatalysators	**524138**	**0**	**P243A**	Diagnostic fault check for the engine protection	Diagnosefehlerprüfung für den Motorschutz
Particulate Filter Monitoring. Überwachung des Oxidationskatalysators	**524139**	**0**	**P246C**	Diagnostic fault check for SRC high in Flow Resistance	Diagnosefehlerprüfung für SRC hoch im Durchflusswiderstand
Particulate Filter Monitoring	**524140**	**0**	**P246C**	Diagnostic fault check for SRC low in Flow Resistance	Diagnosefehlerprüfung für SRC mit niedrigem Durchflusswiderstand
Oxidation Catalyst Monitoring. Überwachung des Oxidationskatalysators	**5317**	**16**	**P3017**	DFC for soot load monitoring in first threshold	DFC zur Rußlastüberwachung in der ersten Schwelle
Oxidation Catalyst Monitoring	**5317**	**0**	**P3018**	DFC for soot load monitoring in first threshold	DFC zur Rußlastüberwachung in der ersten Schwelle
Particulate Filter Monitoring. Überwachung des Oxidationskatalysators	**5319**	**0**	**P2458**	Diagnostic fault check for a locked regeneration.Error temperature sensor in DPF switched (check plug)	Diagnosefehlerprüfung auf gesperrte Regeneration. Fehler Temperaturgeber im DPF vertauscht(Stecker prüfen)
Glow Plugs. Glühkerzen.	**5324**	**11**	**P0671**	Array of DFCs for failure in i+1th Glow Plug	Array von DFCs für Fehler in i + 1th Glow Plug
Glow Plugs. Glühkerzen	**5324**	**4**	**P0671**	Array of DFCs for short circuit in i+1th Glow Plug	Array von DFCs für Kurzschluss in i + 1th Glow Plug
Glow Plugs. Glühkerzen	**5325**	**11**	**P0672**	Array of DFCs for failure in i+1th Glow Plug	Array von DFCs für Fehler in i + 1th Glow Plug
Glow Plugs. Glühkerzen	**5325**	**4**	**P0672**	Array of DFCs for short circuit in i+1th Glow Plug	Array von DFCs für Kurzschluss in i + erstem Glühstift
Glow Plugs. Glühkerzen	**5326**	**11**	**P0673**	Array of DFCs for failure in i+1th Glow Plug	Array von DFCs für Fehler in i + 1th Glow Plug
Glow Plugs. Glühkerzen	**5326**	**4**	**P0673**	Array of DFCs for short circuit in i+1th Glow Plug	Array von DFCs für Kurzschluss in i + erstem Glühstift
Glow Plugs. Glühkerzen	**5327**	**11**	**P0674**	Array of DFCs for failure in i+1th Glow Plug	Array von DFCs für Fehler in i + 1th Glow Plug

Glow Plugs. Glühkerzen	**5327**	**4**	**P0674**	Array of DFCs for short circuit in i+1th Glow Plug	Array von DFCs für Kurzschluss in i + erstem Glühstift
Throttle Valve. Drosselklappe	**5375**	**5**	**P2100**	Throttle valve actuator has electrical fault. Cable interruption, short circuit, plug fault.	Stellmotor der Drosselklappe hat elektrischen Fehler. Kabelunterbrechung, Kurzschluss, Fehler am Stecker.
Throttle Valve. Drosselklappe.	**5375**	**3**	**P2103**	Throttle valve actuator has electrical fault. Cable interruption, short circuit, plug fault.	Stellmotor der Drosselklappe hat elektrischen Fehler. Kabelunterbrechung, Kurzschluss, Fehler am Stecker.
Throttle Valve. Drosselklappe	**5375**	**4**	**P2102**	Throttle valve actuator has electrical fault. Cable interruption, short circuit, plug fault.	Stellmotor der Drosselklappe hat elektrischen Fehler. Kabelunterbrechung, Kurzschluss, Fehler am Stecker.
Throttle Valve. Drosselklappe.	**5377**	**3**	**P2103**	Throttle valve actuator has electrical fault. Cable interruption, short circuit, plug fault.	Stellmotor der Drosselklappe hat elektrischen Fehler. Kabelunterbrechung, Kurzschluss, Fehler am Stecker.
Throttle Valve. Drosselklappe.	**5377**	**4**	**P2102**	Throttle valve actuator has electrical fault. Cable interruption, short circuit, plug fault.	Stellmotor der Drosselklappe hat elektrischen Fehler. Kabelunterbrechung, Kurzschluss, Fehler am Stecker.
PFM	**5631**	**3**	**P302E**	DFC: SRC high in throttle valve upstream pressure sensor Bank1	DFC: SRC hoch in der Drosselklappe vor dem Drucksensor Bank1
PFM	**5631**	**4**	**P302F**	DFC: SRC low in throttle valve upstream pressure sensor Bank1	DFC: SRC niedrig in der Drosselklappe vor dem Drucksensor Bank1
PFM	**5631**	**0**	**P3032**	Physical Range high fault boost pressure sensor bank1	Physikalischer Bereich Hochfehler-Ladedrucksensor Bank1
PFM	**5631**	**1**	**P3033**	Physical Range low fault boost pressure sensor bank1	Physikalischer Bereich Niedrigfehler-Ladedrucksensor Bank1
PFM	**5631**	**16**	**P3034**	Fault boost pressure sensor range high bank1	Fehler Boost Drucksensor Bereich hohe Bank1
PFM	**5631**	**18**	**P3035**	Fault boost pressure sensor range low bank1	Fehlerverstärkungsdrucksensorber eich niedrige Bank1
PFM	**5631**	**12**	**P3036**	Fault boost pressure sensor self diagnosis bank1	Selbstdiagnosebank des Fehlerverstärkungsdrucksensors1
EGR Valve. Abgas- Rückführungsventil (AGR)	**5763**	**5**	**P0403**		
EGR Valve. Abgas- Rückführungsventil (AGR)	**5763**	**12**	**P2413**		

EGR Valve. Abgas- Rückführungsventil (AGR)	**5763**	**3**	**P2142**		
EGR Valve. Abgas- Rückführungsventil (AGR)	**5763**	**4**	**P213C**		
EGR Valve. Abgas- Rückführungsventil (AGR)	**5770**	**3**	**P213D**		
EGR Valve. Abgas- Rückführungsventil (AGR)	**5770**	**4**	**P2141**		
Throttle Valve. Drosselklappe	**5784**	**12**	**P211C**		
Oxidation Catalyst Upstream Temperature T1, B36. Temperatur des Oxidationskatalysators, OXI- KAT- Eingang, T1, B36	**5797**	**2**	**P2080**	Diagnostic fault check for Plausibility errors in Oxidation Catalyst upstream temperature	Diagnosefehlerprüfung auf Plausibilitätsfehler bei der vorgeschalteten Temperatur des Oxidationskatalysators
Oxidation Catalyst Upstream Temperature. Temperatur des Oxidationskatalysators, OXI- KAT- Eingang.	**5797**	**0**	**P242B**	Physical Range Check high for temperature sensor upstream oxidation catalyst	Physikalischer Bereich Hoch auf Temperatursensor vor dem Oxidationskatalysator prüfen
Oxidation Catalyst Upstream Temperature, T1, B36. Temperatur des Oxidationskatalysators, OXI- KAT- Eingang, T1, B36.	**5797**	**1**	**P242B**	Physical range check low for temperature sensor upstream oxidation catalyst	Überprüfung des physikalischen Bereichs auf niedrigen Temperatursensor vor dem Oxidationskatalysator
Oxidation Catalyst Upstream Temperature Sensor, T1, B36. Temperatur des Oxidationskatalysators, OXI- KAT- Eingang, T1, B36.	**5797**	**3**	**P242D**	Diagnostic fault check for SRC high in Oxidation Catalyst upstream temperature	Diagnosefehlerprüfung auf SRC hoch in der vorgeschalteten Temperatur des Oxidationskatalysators
Oxidation Catalyst Upstream Temperature Sensor. Temperatur des Oxidationskatalysators, OXI- KAT- Eingang.	**5797**	**4**	**P242C**	Diagnostic fault check for SRC low in Oxidation Catalyst upstream temperature	Diagnosefehlerprüfung für SRC mit niedriger Vorstromtemperatur des Oxidationskatalysators
CAN. CAN- Bus.	**604**	**12**	**P3060**	DLC Error of CAN-Receive-Frame ETC5	DLC-Fehler des CAN-Receive- Frame ETC5
CAN. CAN- Bus.	**604**	**9**	**P3061**	Timeout Error of CAN-Receive- Frame ETC5	Timeout-Fehler von CAN-Receive-Frame ETC5
Gear Neutral Switch. Not active for CM. Wird im CM nicht ausgewertet.	**604**	**2**	**P07B7**	Alive Detection for Gbx_stNPos	Lebendige Erkennung für Gbx_stNPos
Gear Neutral Switch. Not active for CM. Wird im CM nicht ausgewertet.	**604**	**0**	**P084F**	Plausibility check for Gbx SCB	Plausibilitätsprüfung für Gbx SCB

Gear Neutral Switch. Not active for CM. Wird im CM nicht ausgewertet.	**604**	**1**	**P084F**	Plausibility check for Gbx SCG	Plausibilitätsprüfung für Gbx SCG
Starter Relay, A09 K4. Starter Relais A09 K4.	**6385**	**12**	**P0615**	Over temperature error for Starter high side	Übertemperaturfehler für Starter High Side
Starter Relay, A09 K4. Starter Relais A09 K4.	**6385**	**3**	**P0617**	Short circuit to battery error for Starter high side	Kurzschluss nach Batteriefehler für Starter High Side
Starter Relay, A09 K4. Starter Relais A09 K4.	**6385**	**4**	**P0616**	Short circuit to ground error for Starter high side	Kurzschluss nach Masse Fehler für hohe Starterseite
CAN. CAN- bus.	**639**	**14**	**U0073**	BusOff error CAN A	BusOff-Fehler CAN A.
Injection System. CR- Einspritzsystem	**651**	**5**	**P21CF**	Open load on the power stage	Last auf der Leistungsstufe öffnen
Injection System. CR- Einspritzsystem	**651**	**3**	**P0261**	Short circuit of the power stage low-side (cylinder error)	Kurzschluss der unteren Stufe der Leistungsstufe (Zylinderfehler)
Injection System. CR- Einspritzsystem	**651**	**4**	**P0262**	Short circuit between high-side and low-side of the power stage (high-side non plausible error)	Kurzschluss zwischen High-Side und Low-Side der Leistungsstufe (High-Side nicht plausibler Fehler)
Injection System. CR- Einspritzsystem	**651**	**13**	**P268C**	check of missing injector adjustment value programming	Überprüfung der fehlenden Programmierung des Einspritzventil-Einstellwerts
Injection System. CR- Einspritzsystem	**652**	**5**	**P21D2**	Open load on the power stage	Last auf der Leistungsstufe öffnen
Injection System. CR- Einspritzsystem	**652**	**3**	**P0270**	Short circuit of the power stage low-side (cylinder error)	Kurzschluss der unteren Stufe der Leistungsstufe (Zylinderfehler)
Injection System. CR- Einspritzsystem	**652**	**4**	**P0271**	Short circuit between high-side and low-side of the power stage (high-side non plausible error)	Kurzschluss zwischen High-Side und Low-Side der Leistungsstufe (High-Side nicht plausibler Fehler)
Injection System. CR- Einspritzsystem	**652**	**13**	**P268D**	check of missing injector adjustment value programming	Überprüfung der fehlenden Programmierung des Einspritzventil-Einstellwerts
Injection System. CR- Einspritzsystem	**653**	**5**	**P21D0**	Open load on the power stage	Last auf der Leistungsstufe öffnen
Injection System. CR- Einspritzsystem	**653**	**3**	**P0264**	Short circuit of the power stage low-side (cylinder error)	Kurzschluss der unteren Stufe der Leistungsstufe (Zylinderfehler)
Injection System. CR- Einspritzsystem	**653**	**4**	**P0265**	Short circuit between high-side and low-side of the power stage (high-side non plausible error)	Kurzschluss zwischen High-Side und Low-Side der Leistungsstufe (High-Side nicht plausibler Fehler)
Injection System. CR- Einspritzsystem	**653**	**13**	**P268E**	check of missing injector adjustment value programming	Überprüfung der fehlenden Programmierung des Einspritzventil-Einstellwerts
Injection System. CR- Einspritzsystem	**654**	**5**	**P21D1**	Open load on the power stage	Last auf der Leistungsstufe öffnen
Injection System. CR- Einspritzsystem	**654**	**3**	**P0267**	Short circuit of the power stage low-side (cylinder error)	Kurzschluss der unteren Stufe der Leistungsstufe (Zylinderfehler)

Injection System. CR- Einspritzsystem	**654**	**4**	**P0268**	Short circuit between high-side and low-side of the power stage (high-side non plausible error)	Kurzschluss zwischen High-Side und Low-Side der Leistungsstufe (High-Side nicht plausibler Fehler)
Injection System. CR- Einspritzsystem	**654**	**13**	**P268F**	check of missing injector adjustment value programming	Überprüfung der fehlenden Programmierung des Einspritzventil-Einstellwerts
Pre Supply Pump M10. Elektrische Kraftoffpumpe M10.	**6719**	**5**	**P025A**	open load of pre-supply pump output	offene Last des Vorversorgungspumpenausgangs
Pre Supply Pump M10. Elektrische Kraftoffpumpe M10.	**6719**	**12**	**P025B**	Over temperature error on ECU powerstage for Pre supply pump	Übertemperaturfehler auf der ECU-Leistungsstufe für die Vorversorgungspumpe
Pre Supply Pump M10. Elektrische Kraftoffpumpe M10.	**6719**	**3**	**P025D**	short circuit to battery of pre- supply pump output	Kurzschluss zur Batterie des Vorversorgungspumpenausgangs
Pre Supply Pump M10. Elektrische Kraftoffpumpe M10.	**6719**	**4**	**P025C**	short circuit to ground of pre- supply pump output	Kurzschluss nach Masse des Ausgangs der Vorversorgungspumpe
Glow Plugs. Glühkerzen	**676**	**21**	**P00F7**	DFC for coding error when selected coding is not working	DFC für Codierungsfehler, wenn die ausgewählte Codierung nicht funktioniert
Glow Plugs. Glühkerzen	**676**	**11**	**P00F8**	DFC for faulty diagnostic data transmission or protocol error	DFC für fehlerhafte Diagnosedatenübertragung oder Protokollfehler
Glow Plugs. Glühkerzen	**676**	**2**	**P00F6**	DFC for coding error when different coding words were received in a coding cycle	DFC für Codierungsfehler, wenn in einem Codierungszyklus verschiedene Codierungswörter empfangen wurden
Glow Plug Relay A100. Glüh- Start-Steuergerät A100.	**676**	**5**	**P00F4**	No load error for Low Voltage System	Kein Lastfehler für das Niederspannungssystem
Glow Plug Relay A100. Glüh- Start-Steuergerät A100.	**676**	**12**	**P00F5**	Over temperature error on ECU powerstage for Glow plug Low Voltage System	Übertemperaturfehler auf der ECU-Leistungsstufe für das Glühstift-Niederspannungssystem
Glow Plug Relay A100. Glüh- Start-Steuergerät A100.	**676**	**3**	**P00F2**	Short circuit to battery error for Low Voltage System	Kurzschluss zu Batteriefehler für Niederspannungssystem
Glow Plug Relay A100. Glüh- Start-Steuergerät A100.	**676**	**4**	**P00F3**	Short circuit to ground error for Low Voltage System	Kurzschluss nach Masse Fehler für Niederspannungssystem
Starter Relay A09 K4. Starter Relais A09 K4.	**677**	**12**	**P06E9**	Over temperature error for Starter low side	Übertemperaturfehler für die untere Seite des Anlassers
Starter Relay A09 K4. Starter Relais A09 K4.	**677**	**3**	**P26E4**	Short circuit to battery error for Starter low side	Kurzschluss zum Batteriefehler für Starter-Low-Seite
Starter Relay A09 K4. Starter Relais A09 K4.	**677**	**4**	**P26E5**	Short circuit to ground error for Starter low side	Kurzschluss nach Masse Fehler für niedrige Startseite
Starter Relay A09 K4. Starter Relais A09 K4.	**677**	**5**	**P001A**	No load error for Starter	Kein Ladefehler für Starter

Terminal 50. Klemme 50 Anlasser	**677**	**10**	**P2533**	Defective T50 switch	T50-Schalter defekt
Hand Brake Switch. Handbremsschalter.	**70**	**2**	**P05E7**	Alive Detection for HndBrk_stDebVal	Lebendige Erkennung für HndBrk_stDebVal
CAN. CAN- Bus.	**1231**	**14**	**U0074**	BusOff error CAN B	BusOff-Fehler CAN B.
Fuel Low Pressure System. Kraftstoffdruck zu niedrig.	**94**	**13**	**P01C4**	Low fuel pressure error monitoring	Fehlerüberwachung bei niedrigem Kraftstoffdruck
Fuel Low Pressure Sensor	**95**	**3**	**P01C5**	SRC High for Environment Pressure	SRC hoch für Umgebungsdruck
Fuel Low Pressure Sensor	**95**	**4**	**P01C6**	SRC low for Environment Pressure	SRC niedrig für Umgebungsdruck
Water in Fuel. Wasseranteil im Kraftstoff zu hoch.	**97**	**15**	**P0117**	Water in fuel detected	Wasser im Kraftstoff erkannt
Fuel Level. Fuel filter defective, sensor in fuel filter defective. Niveau Kraftstofftank nicht plausibel. Kraftstofffilter defekt, Sensor im Kraftstofffilter defekt.	**97**	**17**	**P011F**	Fuel Level unplausible - Water in fuel prefilter - Sensor defective - Incorrect pin assignment - Connection cable damaged - filter defective	Kraftstoffstand nicht plausibel. - Wasser im Kraftstoffvorfilter - Sensor defekt - Steckerbelegung fehlerhaft - Anschlusskabel beschädigt - Filter defekt

Component	SPN	**FMI**	**P-Code**	**FaultCheckDescription**	**Fehlerbeschreibung**
Component	SPN	**FMI**	**P- Code**		
Oil Pressure	**100**	**31**	**P0524**	Defect fault check for minimum oil pressure from digital sensor	
Oil Pressure	**100**	**2**	**P0520**	Defect fault check for plausibility test in case of digital sensor	
Oil Pressure	**100**	**0**	**P0521**	Maximum oil pressure error in plausibility check	
Oil Pressure	**100**	**1**	**P0524**	Minimum oil pressure error in plausibility check	
Oil Pressure Sensor	**100**	**19**	**P0520**	Signal erroron CAN for oil pressure sensor	
Oil Pressure Sensor	**100**	**3**	**P0523**	SRC high for oil pressure sensor	
Oil Pressure Sensor	**100**	**4**	**P0522**	SRC low for Oil pressure sensor	
Intake Manifold Pressure	**102**	**0**	**P0238**	Physical Range Check high for air pressure at the upstream of intake valve sensor	
Intake Manifold Pressure	**102**	**1**	**P0237**	Physical Range Check low for air pressure at the upstream of intake valve sensor	

Intake Manifold Pressure	**102**	**16**	**P023D**	Plausibility Check for air pressure at the upstream of intake valve sensor	
Intake Manifold Pressure	**102**	**18**	**P023E**	Plausibility Check for air pressure at the upstream of intake valve sensor	
Intake Manifold Pressure Sensor	**102**	**3**	**P0238**	Diagnostic fault check for SRC high in air pressure upstream of intake valve sensor	
Intake Manifold Pressure Sensor	**102**	**4**	**P0237**	Diagnostic fault check for SRC low in air pressure upstream of intake valve sensor	
Turbo Charger Actuator	**103**	**0**	**P0049**	Turbocharger over speed monitoring	
Brake System	**1045**	**0**	**P0571**	Sig Error for Main Brake	
Brake System	**1046**	**2**	**P0703**	Sig Error for Redundant Brake	
Intercooler Downstream Temperature	**105**	**0**	**P007A**	Physical Range Check high for Charged Air cooler down stream temperature	
Intercooler Downstream Temperature	**105**	**1**	**P007A**	Physical Range Check low for Charged Air cooler down stream temperature	
PFM	**105**	**9**	**P007B**	initialization error for SENT transmission for Charged Air cooler down stream temperature	
PFM	**105**	**2**	**P007E**	sensor internal diagnosis for Charged Air cooler down stream temperature, SENT	
Intercooler Downstream Temperature Sensor	**105**	**3**	**P007D**	SRC High for Charge air cooler downstream Temperature	
Intercooler Downstream Temperature Sensor	**105**	**4**	**P007C**	SRC low for Charge air cooler downstream Temperature	
Air Filter	**107**	**14**	**P008F**	Error path for Clog Detection in Air filter	
Air Filter Downstream Pressure	**107**	**2**	**P008E**	Signal non-plausible for AirFltDs pressure sensor	
Air Filter Downstream Pressure	**107**	**0**	**P008C**	Physical Range high error for Inlet air pressure (P1) sensor	
Air Filter Downstream Pressure	**107**	**1**	**P008D**	Physical Range low error for Inlet air pressure (P1) sensor	
Air Filter Differential Pressure Sensor	**107**	**3**	**P0120**	SRC High for Controller Mode Switch	

Air Filter Differential Pressure Sensor	**107**	**4**	**P0121**	SRC low for Controller Mode Switch	
Air Filter Downstream Pressure Sensor	**107**	**5**	**P008A**	SRC high for AirFltDs pressure sensor	
Air Filter Downstream Pressure Sensor	**107**	**6**	**P008B**	SRC low for AirFltDs pressure sensor	
Air Filter Differential Pressure	**107**	**9**	**P0122**	Air Filter differential pressure check for warning condition	
Metering Unit	**1076**	**5**	**P0251**	open load of metering unit output	
Metering Unit	**1076**	**12**	**P0252**	over teperature of device driver of metering unit	
Metering Unit	**1076**	**16**	**P0259**	short circuit to battery of metering unit output	
Metering Unit	**1076**	**18**	**P0258**	short circuit to ground of metering unit output	
Sensor Supply Monitoring 1	**1079**	**3**	**P0643**	Overvoltage at Sensor supply 1	
Sensor Supply Monitoring 1	**1079**	**4**	**P0642**	Short to GND at Sensor supply 1	
Sensor Supply Monitoring 1	**1079**	**14**	**P0642**	Undervoltage at Sensor supply 1	
Ambient Pressure	**108**	**0**	**P2227**	Ambient air pressure sensor range chack max- error	
Ambient Pressure	**108**	**1**	**P2227**	Ambient air pressure sensor range check min- error	
Ambient Pressure Sensor	**108**	**3**	**P2229**	fault check max signal range violated for ambient air pressure sensor	
Ambient Pressure Sensor	**108**	**4**	**P2228**	fault check min signal range violated for ambient air pressure sensor	
Ambient Pressure Sensor	**108**	**2**	**P222F**	Ambient air pressure sensor sensor error by component self diagnosis	
Sensor Supply Monitoring 2	**1080**	**3**	**P0653**	Overvoltage at Sensor supply 2	
Sensor Supply Monitoring 2	**1080**	**4**	**P0652**	Short to GND at Sensor supply 2	
Sensor Supply Monitoring 2	**1080**	**14**	**P0652**	Undervoltage at Sensor supply 2	
Coolant Temperature	**110**	**17**	**P0116**	defect fault check for Absolute plausibility test	
Coolant Temperature	**110**	**18**	**P0116**	defect fault check for dynamic plausibility test	
Coolant Temperature	**110**	**16**	**P0217**	Engine coolant temperature too high plausibility error	
Coolant Temperature	**110**	**0**	**P0217**	Physical Range Check high for CEngDsT	
Coolant Temperature	**110**	**1**	**P050E**	Physical Range Check low for CEngDsT	
Coolant Temperature Sensor	**110**	**3**	**P0118**	SRC High for Engine coolant temperature(down stream)	
Coolant Temperature Sensor	**110**	**4**	**P0117**	SRC low for Engine coolant temperature(down stream)	

Injection Cut Off	**1109**	**11**	**P0606**	Injection cut off demand (ICO) for shut off coordinator	
Coolant Level	**111**	**18**	**P0137**	Fault Detection For The Digital Input	
Coolant Level	**111**	**17**	**P00F1**	Range Fault Detection	
Coolant Level Sensor	**111**	**3**	**P0138**	Fault Detection For Signal range check high	
Coolant Level Sensor	**111**	**4**	**P0139**	Fault Detection For Signal range check low	
Boost Pressure Governor	**1127**	**13**	**P3021**	Time to reactivate PCR control monitoring	
Boost Pressure Governor	**1127**	**31**	**P3022**	Time to first activation of PCR control monitoring	
ECU Temperature	**1136**	**16**	**P0669**	Diagnostic Fault Check for Physical Signal above maximum limit	
ECU Temperature	**1136**	**18**	**P0668**	Diagnostic Fault Check for Physical Signal below minimum limit	
ECU Temperature Sensor	**1136**	**0**	**P0666**		
ECU Temperature Sensor	**1136**	**1**	**P0667**		
ECU Temperature Sensor	**1136**	**13**	**P267F**	Diagnostic Fault Check for SMP480 ECU Temperature Plausibility	
Turbo Charger Upstream Pressure Sensor	**1176**	**3**	**P07C0**	SRC High for TrbnUs Pressure sensor	
Turbo Charger Upstream Pressure Sensor	**1176**	**4**	**P07BF**	SRC low for TrbnUs Pressure sensor	
Turbo Charger Upstream Temperature	**1180**	**13**	**P0544**	Non Plausibility error for TTrbnUs	
Turbo Charger Upstream Temperature	**1180**	**0**	**P2080**	Physical Range Check high for turbine upstream temperature sensor	
Turbo Charger Upstream Temperature	**1180**	**1**	**P2080**	Physical Range Check low for turbine upstream temperature sensor	
Turbo Charger Upstream Temperature Sensor	**1180**	**3**	**P2080**	SRC High for TrbnUs Temperature	
Turbo Charger Upstream Temperature Sensor	**1180**	**4**	**P2080**	SRC low for TrbnUs Temperature sensor	
MIL	**1213**	**5**	**P0650**	No load error	
MIL	**1213**	**12**	**P0650**	No load error	
MIL	**1213**	**3**	**P263B**	Short circuit to battery error	
MIL	**1213**	**4**	**P263A**	Short circuit to ground error	
CAN	**1231**	**14**	**U0074**	BusOff error CAN B	

CAN	**1235**	**14**	**U0075**	error passive CAN C	
CAN	**1235**	**9**	**U0075**	BusOff error CAN C	
Pressure Control Valve	**1244**	**5**	**P3028**	open load of pressure control valve output	
Pressure Control Valve	**1244**	**12**	**P3029**	over teperature of device driver of pressure control valve	
Pressure Control Valve	**1244**	**16**	**P302A**	short circuit to battery of pressure control valve output	
Pressure Control Valve	**1244**	**18**	**P302B**	short circuit to ground of the pressure control valve output	
Pressure Control Valve	**1244**	**4**	**P302C**	signal range check high error of pressure control valve AD-channel	
Pressure Control Valve	**1244**	**3**	**P302D**	signal range check low error of pressure control valve AD-channel	
PFM	**132**	**13**	**P0100**	Error path of the offset diagnosis of the PFM differential pressure sensor in bank 1	
PFM	**132**	**0**	**P0100**	Error path of the upper out-of-range diagnosis of the PFM differential pressure sensor in bank 1	
PFM	**132**	**1**	**P0100**	Error path of the lower out-of-range diagnosis of the PFM differential pressure sensor in bank 1	
PFM	**132**	**2**	**P0100**	Error path to indicate internal errors of the PFM differential pressure sensor in bank 1	
PFM	**132**	**20**	**P0100**	Error path of the upper physical range diagnosis of the PFM air mass flow signal in bank 1	
PFM	**132**	**21**	**P0100**	Error path of the lower physical range diagnosis of the PFM air mass flow signal in bank 1	
Fuel Filter	**1382**	**0**	**P1026**	Signal error for fuel filter Clg detection	
Fuel Filter	**1382**	**13**	**P1027**	Plausibility error for fuel filter Clg detection	
Fan	**1550**	**12**	**P0482**	Over temperature error	
Injection System	**157**	**18**	**P0A0F**	check for rail pressure build up during start	
High Pressure System	**157**	**16**	**P0194**	Rail pressure raw value is intermittent	
High Pressure System	**157**	**0**	**P0191**	rail pressure raw value is above maximum offset	
High Pressure System	**157**	**1**	**P0191**	rail pressure raw value is below minimum offset	
Rail Pressure Sensor	**157**	**3**	**P0193**	Sensor voltage above upper limit	
Rail Pressure Sensor	**157**	**4**	**P0192**	Sensor voltage below lower limit	
Fan	**1639**	**8**	**P0526**	DFC for reporting DCM timer overflow error	
Fan	**1639**	**0**	**P0527**	Fan speed above maximum threshold	
Fan	**1639**	**1**	**P0528**	Fan speed below minimum threshold	

Engine Compartment Button	**1656**	**12**	**P254F**	fault path for signal check	
Engine Compartment Button	**1656**	**14**	**P257D**	fault path for signal check	
CAN	**1668**	**14**	**U0076**	error passive CAN D	
CAN	**1668**	**9**	**U0076**	BusOff error CAN D	
Alternator Monitoring	**167**	**7**	**P013E**	Plausibility check for input signal for monitoring the alternator	
Battery/Electric Supply	**168**	**3**	**P0563**	Diagnostic Fault Check for Signal Range Max Check of Battery Voltage	
Battery/Electric Supply	**168**	**4**	**P0562**	Diagnostic Fault Check for Signal Range Min Check of Battery Voltage	
Ambient Temperature Sensor	**171**	**3**	**P0073**	max-error of ambient air temperature sensor	
Ambient Temperature Sensor	**171**	**4**	**P0072**	min-error of ambient air temperature sensor	
Air Temperature	**172**	**8**	**P0114**	SRC high for period duration of air temperature sensor	
Air Temperature	**172**	**9**	**P0114**	SRC low for period duration of air temperature sensor	
Air Temperature Sensor	**172**	**3**	**P0113**	SRC high for air temperature sensor	
Air Temperature Sensor	**172**	**4**	**P0112**	SRC low for air temperature sensor	
Air Temperature Sensor	**172**	**2**	**P0111**	Diagnostic fault check for air temperature sensor	
Fuel Low Pressure Temperature	**174**	**0**	**P0181**	Physical Range Check high for fuel temperature	
Fuel Low Pressure Temperature	**174**	**1**	**P0181**	Physical Range Check low for fuel temperature	
Fuel Low Pressure Temperature Sensor	**174**	**3**	**P0183**	SRC high for fuel temperature sensor	
Fuel Low Pressure Temperature Sensor	**174**	**4**	**P0182**	SRC low for fuel temperature sensor	
Fuel Low Pressure Temperature Sensor	**174**	**11**	**P008F**	DFC for fuel temperature plausibility check function	
Oil Temperature	**175**	**2**	**P0199**	Plausibility check for Oil Temperature	
Oil Temperature	**175**	**13**	**P0195**	Oil temperature too high plausibility error	
Oil Temperature	**175**	**0**	**P0196**	Physical Range Check high for Oil Temperature	
Oil Temperature	**175**	**1**	**P0196**	Physical Range Check low for Oil Temperature	
Oil Temperature Sensor	**175**	**3**	**P0198**	SRC High for Oil Temperature	
Oil Temperature Sensor	**175**	**4**	**P0197**	SRC low for Oil Temperature	

Engine Protection	**1769**	**11**	**P0219**	Overspeed detection in component engine protection	
Camshaft Speed Sensor	**190**	**8**	**P0344**	DFC for camshaft signal diagnose - disturbed signal	
Camshaft Speed Sensor	**190**	**12**	**P0340**	DFC for camshaft signal diagnose - no signal	
Camshaft Speed Sensor	**190**	**2**	**P0016**	DFC for camshaft offset angle exceeded	
Crankshaft Speed Sensor	**190**	**9**	**P0336**	DFC for crankshaft signal diagnose - disturbed signal	
Crankshaft Speed Sensor	**190**	**18**	**P2617**	DFC for crankshaft signal diagnose - no signal	
RmtAPP Poti 1	**20277**	**3**	**P2123**	Signal Range Check High for RmtAPP1	
RmtAPP Poti 1	**20277**	**4**	**P2122**	Signal Range Check Low for RmtAPP1	
RmtAPP Poti 2	**20278**	**3**	**P2128**	Signal Range Check High for RmtAPP2	
RmtAPP Poti 2	**20278**	**4**	**P2127**	Signal Range Check Low for RmtAPP2	
CAN	**22000**	**14**	**U0073**	error passive CAN A	
CAN	**22001**	**15**	**U0074**	error passive CAN B	
CAN	**22040**	**19**	**U1173**	Timeout Error of CAN-Receive-Frame TSC1TE	
Battery/Electric Supply	**23618**	**3**	**P0563**	The DFC is set if the battery voltage exceed the higher calibrated limit longer than the debounce time. If the DFC is set, diagnoses of the power stages can be disabled.	
Battery/Electric Supply	**23618**	**4**	**P0562**	The DFC is set if the battery voltage exceed the lower calibrated limit longer than the debounce time. If the DFC is set, diagnoses of the power stages can be disabled.	
CAN	**2541**	**9**	**U1125**	Timeout Error of CAN-send-Frame ACK	
Turbo Charger Actuator	**2633**	**7**	**P004E**		
Turbo Charger Actuator	**2633**	**0**	**P2263**		
Turbo Charger Actuator	**2633**	**1**	**P2263**		

Vehicle battery. Power supply to A09-K6. **Or too old software versions for the HATZ-Engine or the Workhydraulics.** Main Relay A09- K6. Fahrzeug Batterie. Spannungsversorgung zu A09- K6. Hauptrelais A09 K6. **Oder zu alte SoftwareVersionen für den HATZ- Motor oder die Arbeitshydraulik.**	**2634**	**11**	**P068A**	Early opening defect of main relay. Cause: Battery voltage too low or battery defective. Remedy Charge battery! Defective batteries must be replaced immediately.Software version for the HATZ- Engine too old. Check the software verion of the engine. At least software version **V610R01** is required. Software version for work hydraulics too old! Check software version of the work hydraulics. At least software version **1491.00.001.002.000** is required for the working hydraulics!Coolant level in the expansion tank too low. Fill coolant 1.5 cm above the max. mark in the expansion tank.Check fuse F19, F4 and main relay engine K6, replace if required. Check ground point (GND) X40 and X41.	Vorzeitiger Öffnungsfehler des Hauptrelais K6. Ursache: Batteriespannung zu niedrig oder Battrie defekt. Batterie aufladen! Defekte Batterien sind sofort auszutauschen. Softwarestand für das Motorsteuergerät zu alt! Es wird mindestens die Version V610R01 für den HATZ- Motor benötigt! Softwarestand für Arbeitshydraulik zu alt! Softwarestand prüfen. Es wird mindestens die Software- Version 1491.00.001.002.000 für die Arbeitshydraulik benötigt. Kühlmittelstand im Ausgleichsbehälter zu niedrig. Kühlmittel 1.5 cm über die Max- Markierung im Ausgleichsbehälter auffüllen. Sicherung F19, F4 und Hauptrelais Motor K6 prüfen, ggf. austauschen. Massepunkt X40 und X41 prüfen.
Main Relay A09 K6. Hauptrelais A09 K6	**2634**	**12**	**P068B**	DFC for stuck main relay error. Batttery voltage too low. Check fuse F19, F4 and main relay K6, replace if required.	Relaiskontakt fest oder Relais K6 defekt. Batteriespannung zu niedrig. Sicherung F19, F4 und Hauptrelais K6 prüfen, ggf. austauschen.
EGR Monitoring	**2659**	**7**	**P3056**	Sooting in EGR Line	
EGR Monitoring	**2659**	**18**	**P049A**	High flow error 1 in EGR system	
EGR Monitoring	**2659**	**1**	**P049A**	High flow error 2 in EGR system	
EGR Valve	**27**	**17**	**P049D**		
CAN	**2791**	**9**	**U010C**	Timeout Error of CAN-Transmit-Frame EEC5	
EGR Monitoring	**2791**	**6**	**P213B**		
EGR Valve	**2791**	**15**	**P049E**		
EGR Valve	**2791**	**12**	**P0488**		
EGR Valve	**2791**	**18**	**P049C**		
EGR Valve	**2791**	**16**	**P049B**		
EGR Valve	**2791**	**1**	**P042F**		
EGR Valve	**2791**	**0**	**P042E**		
EGR Valve	**2791**	**20**	**P213B**		
EGR Valve	**2791**	**21**	**P213B**		
EGR Valve	**2791**	**7**	**P213B**		
EGR Valve	**2791**	**13**	**P0490**		
EGR Valve	**2791**	**14**	**P0489**		
EGR Valve	**2791**	**11**	**P213B**		

Turbo Charger Actuator	**2795**	**21**	**P2598**		
Turbo Charger Actuator	**2795**	**20**	**P2599**		
ECU Internal	**2802**	**14**	**P062F**	EEP Read Error based on the error in reading blocks from memory media	
ECU Internal	**2802**	**12**	**P062F**	EEP Write Error based on the error in storing the blocks in memory media	
APP Poti 2	**29**	**3**	**P0223**	Signal Range Check High for APP2	
APP Poti 2	**29**	**4**	**P0222**	Signal Range Check Low for APP2	
APP Synchronsition Error	**29**	**2**	**P2138**	In case of dual analog accelerator pedal, it is the plausibility check between RmtAPP1 and RmtAPP2 and in case of potentiometer switch accelerator pedal, it is the plausibility check between APP1 and idle switch	
Air Condition Compressor	**3062**	**5**	**P304C**	No load error on power stage for the reduce torque instruction	
Air Condition Compressor	**3062**	**12**	**P304C**	Over temperature error on powerstage for the reduce torque instruction	
Air Condition Compressor	**3062**	**3**	**P304C**	Short circuit to battery error on power stage for the reduce torque instruction	
Air Condition Compressor	**3062**	**4**	**P304C**	Short circuit to ground error on power stage for the reduce torque instruction	
Particulate Filter Upstream Temperature	**3242**	**0**	**P2481**	Physical Range Check high for particulate filter upstream temperature sensor	
Particulate Filter Upstream Temperature	**3242**	**1**	**P2481**	Physical Range Check low for particulate filter upstream temperature sensor	
CAN	**3244**	**9**	**U1180**	Timeout error of aftertreatment 1 Diesel Particulate Filter Intake Gas Temperature	
Particulate Filter Upstream Temperature	**3244**	**2**	**P2484**	Diagnostic fault check for Plausibility errors in Particle filter upstream temperature	
Particulate Filter Upstream Temperature Sensor	**3244**	**3**	**P2471**	Diagnostic fault check for Signal Range Check max error for the temperature sensor installed at the upstream of particulate filter.	
Particulate Filter Upstream Temperature Sensor	**3244**	**4**	**P2470**	Diagnostic fault check for Signal Range Check min error for the temperature sensor installed at the upstream of particulate filter.	
Particulate Filter Downstream Temperature	**3248**	**2**	**P2483**	Diagnostic fault check for plausibility of particle filter downstream temperature	
Particulate Filter Downstream Temperature Sensor	**3248**	**3**	**P2482**	DFC for Max-error of Signal-Range-Check	

Particulate Filter Downstream Temperature Sensor	**3248**	**4**	**P2481**	DFC for Min-error of Signal-Range-Check	
Particulate Filter Differential Pressure Sensor Hoseline	**3251**	**13**	**P2453**	Fault check for Hoseline connection	
Particulate Filter Differential Pressure Sensor	**3251**	**2**	**P2453**	Fault check for the pressure sensor plausibility	
CAN	**3252**	**9**	**U029D**	Timeout Error of CAN-Transmit-Frame AT1IMG	
Particulate Filter Monitoring	**3253**	**0**	**P2453**	Diagnostic fault check for maximum pressure differential charecterstics	
Particulate Filter Monitoring. DPF-Überwachung.	**3253**	**1**	**P2453**	Diagnostic fault check for minimum pressure differential charecterstics. Lines (hoses) are clogged. Differential pressure sensor B35 defective.	Diagnostische Fehlerprüfung auf minimale Druckdifferenz. Leitungen (Schläuche) verstopft. Differendruckgeber B35 defekt.
Particulate Filter Monitoring. DPF-Überwachung.	**3253**	**2**	**P244A**	Check for minimum exhaust gas differential pressure for high load. Lines (hoses) are clogged. Differential pressure sensor B35 defective.	Auf minimalen Abgasdifferenzdruck bei hoher Belastung prüfen. Leitungen (Schläuche) sind verstopft. Differenzdrucksensor B35 defekt.
Particulate Filter Monitoring. DPF-Überwachung.	**3253**	**12**	**P2453**	Diagnostic fault check for min deviation measure from simulated and measured particulate mass	
CAN	**3353**	**9**	**U0120**	Timeout Error of CAN-Transmit-Frame AS	
CAN	**3361**	**9**	**U113C**	Time out BAM to packet	
CAN	**3361**	**10**	**U113D**	Time out Packet to packet	
Turbo Charger Actuator	**3470**	**21**	**P22D3**		
Turbo Charger Actuator	**3470**	**20**	**P22D2**		
Turbo Charger Actuator	**3470**	**12**	**P2563**		
Turbo Charger Actuator	**3470**	**14**	**P2563**		
Sensor Supply Monitoring 1	**3509**	**2**	**P0641**	Voltage fault at Sensor supply 1	
Sensor Supply Monitoring 2	**3510**	**2**	**P0651**	Voltage fault at Sensor supply 2	
Sensor Supply Monitoring 3	**3511**	**2**	**P0697**	Voltage fault at Sensor supply 3	

Particulate Filter Differential Pressure	**3609**	**16**	**P244B**	Enhanced SRC high for PFlt differential pressure sensor	
Particulate Filter Differential Pressure	**3609**	**18**	**P244A**	Enhanced SRC low for PFlt differential pressure sensor	
Particulate Filter Differential Pressure	**3609**	**9**	**P2453**	DFC for dynamic plausibility check for differential pressure across the Particulate filter	
Particulate Filter Differential Pressure	**3609**	**12**	**P2453**	DFC to check for hoseline error	
Particulate Filter Differential Pressure	**3609**	**31**	**P2453**	Diagnostic Fault Check for Soot on hoseline monitoring	
Particulate Filter Differential Pressure Sensor	**3609**	**3**	**P2455**	SRC High for PFlt differential pressure sensor	
Particulate Filter Differential Pressure Sensor	**3609**	**4**	**P2454**	SRC low for PFlt differential pressure sensor	
Turbo Charger Actuator	**3675**	**8**	**P2103**		
Turbo Charger Actuator	**3675**	**14**	**P2102**		
Turbo Charger Actuator	**3675**	**0**	**P0046**		
Turbo Charger Actuator	**3675**	**1**	**P0046**		
Turbo Charger Actuator	**3675**	**3**	**P2565**		
Turbo Charger Actuator	**3675**	**4**	**P2564**		
Fuel Filter Heater	**4009**	**5**	**P2687**	No load error in powerstage of fuel filter heating	
Fuel Filter Heater	**4009**	**12**	**P2687**	Over Temperature error in powerstage of fuel filter heating	
Fuel Filter Heater	**4009**	**3**	**P2689**	Short circuit to battery error in powerstage of fuel filter heating	
Fuel Filter Heater	**4009**	**4**	**P2688**	Short circuit to ground error in powerstage of fuel filter heating	
Turbo Charger Actuator	**4228**	**0**	**P211C**		
Starter Relay	**430**	**3**	**P303E**	Short circuit to battery error at High side of coil in Inhibit starter strategy	
Starter Relay	**430**	**12**	**P3040**	Indicates if starter is overheated	
EGR Monitoring	**4752**	**1**	**P00E3**	DFC for monitoring EGR cooler efficiency	
CAN	**4770**	**9**	**U1182**	Timeout Error of CAN-Transmit-Frame A1DOC	

Particulate Filter Monitoring	**4781**	**0**	**P242F**	To check if volume of Ash load has exceeded the limit	
Particulate Filter Monitoring	**4781**	**1**	**P2002**	Diagnostic fault check for particulate filter efficiency	
Particulate Filter Monitoring	**4781**	**8**	**P2459**	Diagnostic fault check for too frequent regeneration of the particulate filter	
Particulate Filter Monitoring	**4781**	**31**	**P24A2**	Diagnostic fault check for incomplete regeneration of particulate filter	
Particulate Filter Monitoring	**4781**	**16**	**P243F**	Diagnostic fault check for pressure differential charecterstics	
Particulate Filter Monitoring	**4781**	**18**	**P24A4**	Diagnostic fault check for pressure differential charecterstics	
Particulate Filter Monitoring	**4781**	**13**	**P2463**	Diagnostic fault check for Maximum soot mass	
Particulate Filter Monitoring	**4781**	**7**	**P246C**	torque soot mass limit dfc	
CAN	**4785**	**9**	**U1181**	Timeout Error of CAN-Transmit-Frame DPF1S	
Oxidation Catalyst Heater Plugs	**4791**	**5**	**P04F2**	DFC for open circuit to ground, K20 line for the DOC Heater feedback relay diagnosis line	
Oxidation Catalyst Heater Plugs	**4791**	**6**	**P04F2**	DFC for short circuit to ground, K20 line for the DOC Heater feedback relay diagnosis line	
Oxidation Catalyst Heater Plugs	**4791**	**3**	**P04F3**	DFC for open circuit to ground, K59 line for the DOC Heater feedback relay diagnosis line	
Oxidation Catalyst Heater Plugs	**4791**	**4**	**P04F3**	DFC for short circuit to ground, K59 line for the DOC Heater feedback relay diagnosis line	
Oxidation Catalyst Heater Relay	**4793**	**5**	**P04F4**	No load error	
Oxidation Catalyst Heater Relay	**4793**	**12**	**P04F8**	Over temperature error	
Oxidation Catalyst Heater Relay	**4793**	**3**	**P04F6**	Short circuit to battery error	
Oxidation Catalyst Heater Relay	**4793**	**4**	**P04F4**	Short circuit to ground error	
Warning Lamp	**5077**	**5**	**P065D**	No load error	
Warning Lamp	**5077**	**12**	**P065D**	Over Temperature error	
Warning Lamp	**5077**	**3**	**P065D**	Short circuit to battery error	
Warning Lamp	**5077**	**4**	**P065D**	Short circuit to ground error	
Throttle Valve. Drosselklappe. Drosselklappe	**51**	**6**	**P2107**		
Throttle Valve. Drosselklappe. Drosselklappe	**51**	**0**	**P2112**		
Throttle Valve. Drosselklappe. Drosselklappe	**51**	**12**	**P2101**		

Throttle Valve. Drosselklappe. Drosselklappe	**51**	**13**	**P211B**		
Throttle Valve. Drosselklappe. Drosselklappe	**51**	**1**	**P0638**		
Coolant Temperature Display	**5100**	**5**	**P3048**	No load error	
Coolant Temperature Display	**5100**	**12**	**P3049**	Over temperature error on ECU powerstage coolant temperature PWM output	
Coolant Temperature Display	**5100**	**3**	**P304A**	Short circuit to battery error	
Coolant Temperature Display	**5100**	**4**	**P304B**	Short circuit to ground error	
Throttle Valve. Drosselklappe. Drosselklappe	**511**	**0**	**P2111**		
Throttle Valve. Drosselklappe. Drosselklappe	**511**	**12**	**P2101**		
Throttle Valve. Drosselklappe. Drosselklappe	**511**	**13**	**P211A**		
Throttle Valve. Drosselklappe. Drosselklappe	**511**	**7**	**P2176**		
Throttle Valve. Drosselklappe. Drosselklappe	**511**	**3**	**P210D**		
Throttle Valve. Drosselklappe. Drosselklappe	**511**	**4**	**P210C**		
Throttle Valve. Drosselklappe. Drosselklappe	**511**	**14**	**P211C**		
Throttle Valve. Drosselklappe. Drosselklappe	**512**	**12**	**P2101**		
Throttle Valve. Drosselklappe. Drosselklappe	**515**	**0**	**P0638**		
PFM	**516096**	**0**	**P006A**	DFC to indicate the occurrence of maximum plausibility error for PFM	
PFM	**516096**	**1**	**P006A**	DFC to indicate the occurrence of minimum plausibility error for PFM	

PFM	**516097**	**8**	**P2430**	Error path to display communication errors of the 2nd SENT line of the PFM sensor in bank 1	
PFM	**516097**	**0**	**P2430**	Error path of electrical line hi diagnosis of the 2nd SENT line of the PFM sensor in bank 1	
PFM	**516097**	**1**	**P2430**	Error path of electrical line low diagnosis of the 2nd SENT line of the PFM sensor in bank 1	
PFM	**516098**	**19**	**P2430**	Error path to display communication errors of the SENT line of the PFM sensor in bank 1	
PFM	**516098**	**0**	**P2430**	Error path of electrical line hi diagnosis of the SENT line of the PFM sensor in bank 1	
PFM	**516098**	**1**	**P2430**	Error path of electrical line low diagnosis of the SENT line of the PFM sensor in bank 1	
CAN	**520**	**2**	**U1174**	DFC for DLC Error of CAN-Receive-Frame TSC1TR	
CAN	**520**	**9**	**U1175**	Timeout Error of CAN-Receive-Frame TSC1TR	
Air Condition Compressor	**522001**	**14**	**P2519**	Plausibility error for CAN input	
Air Condition Compressor	**522002**	**14**	**P255F**	Signal error for CAN input	
CAN	**522003**	**9**	**U1147**	Timeout Error of CAN-Transmit-Frame EEC@	
CAN	**522004**	**9**	**U1149**	Timeout Error of CAN-Transmit-Frame EFL_P1	
CAN	**522005**	**12**	**U114F**	DFC for DLC Error of CAN-Receive-Frame ETC2	
CAN	**522005**	**9**	**U1150**	Timeout Error of CAN-Receive-Frame ETC2	
CAN	**522006**	**9**	**U1126**	Timeout Error of CAN-Transmit-Frame FIC	
CAN	**522008**	**19**	**U1127**	Timeout Error of Engine Retarder Configuration BAM message	
CAN	**522009**	**9**	**U1128**	Timeout Error of Engine Retarder Configuration packet frame	
CAN	**522010**	**2**	**U1154**	DFC for DLC Error of CAN-Receive-Frame TCO1	
CAN	**522011**	**9**	**U1117**	Timeout Error of CAN-Receive-Frame TI1	
CAN	**522012**	**2**	**U112B**	DFC for DLC Error of CAN-Receive-Frame TimeDate	
CAN	**522012**	**9**	**U112C**	Timeout Error of CAN-Receive-Frame TimeDate	
CAN	**522013**	**9**	**U115C**	Passive DFC TimeOut of TSC1DR Message	
CAN	**522014**	**9**	**U115D**	Passive DFC TimeOut of TSC1DR Message	
CAN	**522015**	**9**	**U115E**	Active DFC TimeOut of TSC1PE Message	
CAN	**522016**	**9**	**U115F**	Passive DFC TimeOut of TSC1PE Message	
CAN	**522017**	**9**	**U1164**	Active Time out for TSC1VE	
CAN	**522018**	**9**	**U1165**	Passive Time out for TSC1VE	
CAN	**522019**	**9**	**U1166**	Active Time out for TSC1VR	
CAN	**522020**	**9**	**U1167**	Passive Time out for TSC1VR	

CAN	**522021**	**2**	**U116C**	DFC for DLC Error of CAN-Receive-Frame TSC1DE	
CAN	**522021**	**9**	**U116D**	Timeout Error of CAN-Receive-Frame TSC1DE	
CAN	**522022**	**2**	**U116E**	DFC for DLC Error of CAN-Receive-Frame TSC1DR	
CAN	**522022**	**9**	**U116F**	Timeout Error of CAN-Receive-Frame TSC1DR	
CAN	**522023**	**2**	**U1170**	DFC for DLC Error of CAN-Receive-Frame TSC1PE	
CAN	**522023**	**9**	**U1171**	Timeout Error of CAN-Receive-Frame TSC1PE	
CAN	**522024**	**2**	**U1176**	DFC for DLC Error of CAN-Receive-Frame TSC1VE	
CAN	**522024**	**9**	**U1177**	Timeout Error of CAN-Receive-Frame TSC1VE	
CAN	**522025**	**2**	**U1178**	DFC for DLC Error of CAN-Receive-Frame TSC1VR	
CAN	**522025**	**9**	**U1179**	Timeout Error of CAN-Receive-Frame TSC1VR	
CAN	**522026**	**9**	**U112E**	Timeout DFC for NOxSensGlbReqTx.	
CAN	**522027**	**9**	**U112F**	Timeout DFC for TxPGNRQ.	
CAN	**522028**	**9**	**U1138**	Timeout Error of CAN-Transmit-Frame VD	
CAN	**522029**	**9**	**U1139**	Timeout Error of CAN-Transmit-Frame VEP1	
CAN	**522030**	**9**	**U113A**	Timeout Error of CAN-Transmit-Frame WFI	
High Pressure System	**522041**	**0**	**P3039**	DFC for monitoring the positive rail pressure deviation during CSERS and active RHU	
High Pressure System	**522041**	**1**	**P303A**	DFC for monitoring the negative rail pressure deviation during CSERS and active RHU	
High Pressure System	**522041**	**18**	**P303B**	Common DFC for monitoring the negative rail pressure deviation for CSERS during RHU (pressure to high)	
High Pressure System	**522042**	**1**	**P00C6**	check of minimum rail pressure	
High Pressure System	**522042**	**0**	**P016D**	check for TTC rail pressure build up during start	
Air Control Governor	**522052**	**0**	**P02EC**	Positive governor deviation above limit for regeneration	
Air Control Governor	**522052**	**1**	**P02ED**	negative governor deviation below limit for regeneration	
Air Control Governor	**522053**	**0**	**P0402**	Status of diagnostic fault check for maximum airmass governor deviation	
Air Control Governor	**522054**	**1**	**P0401**	Status of diagnostic fault check for minimum airmass governor deviation	
Air Control Governor	**522055**	**9**	**P016A**	Error path for too longtime spent in transtion mode Rgn to Nrm	

Air Control Governor	**522056**	**9**	**P02E1**	Error case for SlowResponse of the air mass in case of a negative gradient of the air mass setpoint	
Air Control Governor	**522056**	**10**	**P02E1**	Error case for SlowResponse of the air mass in case of a positive gradient of the air mass setpoint	
Air Control Governor	**522057**	**0**	**P0402**	Status of diagnostic fault check for maximum airmass governor deviation	
Air Control Governor	**522057**	**1**	**P0401**	Status of diagnostic fault check for minimum airmass governor deviation	
Air Control Governor	**522058**	**9**	**P016A**	Status of diagnostic fault check to monitor time to activate close loop control system for airmass	
Air Control Governor	**522058**	**10**	**P016A**	Status of diagnostic fault check to monitor time to start close loop control system for airmass	
High Pressure System	**523010**	**2**	**P0252**	setpoint of metering unit in idle mode not plausible	
CAN	**523011**	**0**	**U113E**	Error path SPN1 matching of DM1DCU message	
CAN	**523012**	**0**	**U113F**	Error path SPN2 matching of DM1DCU message	
CAN	**523013**	**0**	**U1140**	Error path SPN3 matching of DM1DCU message	
CAN	**523014**	**0**	**U1141**	Error path SPN4 matching of DM1DCU message	
CAN	**523015**	**0**	**U1142**	Error path SPN5 matching of DM1DCU message	
CAN	**523016**	**9**	**U1143**	Time out for DM1DCU BAM or single message	
CAN	**523017**	**9**	**P304F**	Timeout Error of CAN-Transmit-Frame PROSCR1	
CAN	**523018**	**9**	**P3050**	Timeout Error of CAN-Transmit-Frame PROSCR2	
CAN	**523019**	**2**	**P3057**	DFC for RESETRx Frame Non Plausible error	
CAN	**523020**	**9**	**P0115**	Timeout Error of CAN-Transmit-Frame StOut	
Error Lamp	**523021**	**5**	**P0071**	No load error	
Error Lamp	**523021**	**12**	**P0072**	Over temperature error	
Error Lamp	**523021**	**3**	**P0073**	Short circuit to battery error	
Error Lamp	**523021**	**4**	**P0074**	Short circuit to ground error	
Fuel Consumption Display	**523022**	**5**	**P031A**	No load error for Fuel consumption display signal component	
Fuel Consumption Display	**523022**	**12**	**P031B**	Over Temperature error for Fuel consumption display signal component	
Fuel Consumption Display	**523022**	**3**	**P031C**	Short circuit to battery error for Fuel consumption display signal component	

Fuel Consumption Display	**523022**	**4**	**P031D**	Short circuit to ground error for Fuel consumption display signal component	
Fuel Balance Control Monitoring	**523023**	**0**	**P0316**	FBC correction quantities at limitation	
Fuel Balance Control Monitoring	**523024**	**0**	**P0317**	FBC correction quantities at limitation	
Fuel Balance Control Monitoring	**523025**	**0**	**P0318**	FBC correction quantities at limitation	
Fuel Balance Control Monitoring	**523026**	**0**	**P0319**	FBC correction quantities at limitation	
Fuel Level Lamp	**523027**	**5**	**P0565**	Open load of Fuel Level lamp output	
Fuel Level Lamp	**523027**	**12**	**P0565**	Over temperature error on ECU powerstage for Fuel Level lamp	
Fuel Level Lamp	**523027**	**3**	**P0565**	Short circuit to battery of Fuel Level lamp output	
Fuel Level Lamp	**523027**	**4**	**P0565**	Short circuit to ground of Fuel Level lamp output	
Turbo Charger Upstream Temperature Lamp	**523028**	**5**	**P0053**	No load error	
Turbo Charger Upstream Temperature Lamp	**523028**	**12**	**P0054**	No load error	
Turbo Charger Upstream Temperature Lamp	**523028**	**3**	**P0055**	Short circuit to battery error	
Turbo Charger Upstream Temperature Lamp	**523028**	**4**	**P0056**	Short circuit to ground error	
High Pressure System	**523029**	**0**	**P3036**	set value of PCV not in plausibility range	
High Pressure System	**523030**	**0**	**P3037**	minimum rail pressure exceeded	
High Pressure System	**523031**	**0**	**P3038**	maximum rail pressure exceeded	
High Pressure System	**523032**	**0**	**P0087**	Rail pressure monitor for rail pressure deviation	
High Pressure System	**523033**	**0**	**P228D**	Exceeding of max. rail pressure level, that is an alarm (Alrm) sign and might need action soon.	
High Pressure System	**523034**	**0**	**P228D**	Exceeding of max. rail pressure level, that needs immediate (Imdt) action	
High Pressure System	**523035**	**0**	**P228D**	Activating reactions for fighting the over pressure	

High Pressure System	**523036**	**0**	**P228D**	Maximum number of activations of the reaction that fights the over pressure exceeeded	
High Pressure System	**523037**	**0**	**P052E**	maximum positive deviation of rail pressure exceeded	
High Pressure System	**523038**	**0**	**P052E**	maximum positive deviation of rail pressure exceeded concerning set value PCV	
High Pressure System	**523039**	**0**	**P052E**	maximum negative rail pressure deviation with closed pressure control valve exceeded (second stage)	
High Pressure System	**523040**	**0**	**P052E**	maximum negative rail pressure deviation with closed pressure control valve exceeded	
High Pressure System	**523041**	**0**	**P052E**	minimum rail pressure exceeded	
High Pressure System	**523042**	**0**	**P052E**	maximum rail pressure exceeded (second stage)	
High Pressure System	**523043**	**0**	**P052E**	maximum rail pressure exceeded	
High Pressure System	**523044**	**16**	**P303C**	Common DFC for monitoring the positive rail pressure deviation for CSERS during RHU (pressure to high)	
CAN	**523211**	**12**	**U1144**	DFC for DLC Error of CAN-Receive-Frame EBC1	
CAN	**523211**	**9**	**U1145**	Timeout Error of CAN-Receive-Frame EBC1	
CAN	**523213**	**9**	**U114C**	Timeout Error of CAN-Transmit-Frame ERC1	
CAN	**523214**	**12**	**U114D**	DFC for DLC Error of CAN-Receive-Frame ETC1	
CAN	**523214**	**9**	**U114E**	Timeout Error of CAN-Receive-Frame ETC1	
CAN	**523218**	**2**	**U1129**	DFC for DLC Error of CAN-Receive-Frame RxCCVS	
CAN	**523218**	**9**	**U112A**	Timeout Error of CAN-Receive-Frame ETC1	
CAN	**523222**	**9**	**U1155**	Timeout Error of CAN-Receive-Frame TCO1	
Glow Control Unit	**523324**	**8**	**P3051**	DFC for short circuit to battery error	
Glow Control Unit	**523324**	**5**	**P066A**	DFC for open load error	
Glow Control Unit	**523324**	**6**	**P067B**	DFC for Over load error	
Glow Control Unit	**523324**	**3**	**P06B9**	DFC for short circuit to ground error	
Glow Control Unit	**523325**	**8**	**P3052**	DFC for short circuit to battery error	
Glow Control Unit	**523325**	**5**	**P066C**	DFC for open load error	
Glow Control Unit	**523325**	**6**	**P066B**	DFC for Over load error	
Glow Control Unit	**523325**	**3**	**P06BA**	DFC for short circuit to ground error	
Glow Control Unit	**523326**	**8**	**P3053**	DFC for short circuit to battery error	
Glow Control Unit	**523326**	**5**	**P066E**	DFC for open load error	
Glow Control Unit	**523326**	**6**	**P066F**	DFC for Over load error	
Glow Control Unit	**523326**	**3**	**P06BB**	DFC for short circuit to ground error	
Glow Control Unit	**523327**	**8**	**P3054**	DFC for short circuit to battery error	
Glow Control Unit	**523327**	**5**	**P067A**	DFC for open load error	
Glow Control Unit	**523327**	**6**	**P067B**	DFC for Over load error	

Glow Control Unit	**523327**	**3**	**P06BC**	DFC for short circuit to ground error	
Injection System	**523350**	**4**	**P2146**	Short circuit of the power stage high-side (bank error)	
Injection System	**523352**	**4**	**P2149**	Short circuit of the power stage high-side (bank error)	
PTO	**523450**	**2**	**P00FA**	Diagnostic fault check non plausibility of COM message	
PTO	**523450**	**19**	**P251D**	Diagnostic fault check for signal error of COM message	
Boost Pressure Governor	**523460**	**0**	**P3019**	positive governor deviation above limit	
Boost Pressure Governor	**523460**	**16**	**P301A**	Error case for the collected max error status	
Boost Pressure Governor	**523460**	**15**	**P301B**	Error case for boost pressure crossing max limit for open-loop mode	
Boost Pressure Governor	**523460**	**13**	**P301C**	Error case for permanent control max deviation for partial load	
Boost Pressure Governor	**523461**	**1**	**P301D**	negative governor deviation below limit	
Boost Pressure Governor	**523461**	**18**	**P301E**	Error case for the collected min error status	
Boost Pressure Governor	**523461**	**17**	**P301F**	Error case for boost pressure crossing min limit for open-loop mode	
Boost Pressure Governor	**523461**	**13**	**P3020**	Error case for permanent control min deviation for partial load	
Vehicle Speed Sensor	**523591**	**2**	**P05CB**	Signal error for vehicle speed over CAN	
Vehicle Speed Sensor	**523592**	**0**	**P2161**	Max error for vehicle speed signal over Tachomter sensor	
Vehicle Speed Sensor	**523592**	**1**	**P2160**	Min error for vehicle speed signal over Tachomter sensor	
Vehicle Speed Sensor	**523592**	**2**	**P2158**	Signal error for vehicle speed over Tachometer	
Sensor Supply Monitoring 3	**523601**	**3**	**P0699**	Overvoltage at Sensor supply 3	
Sensor Supply Monitoring 3	**523601**	**4**	**P0698**	Short to GND at Sensor supply 3	
Sensor Supply Monitoring 3	**523601**	**14**	**P0698**	Undervoltage at Sensor supply 3	
Sensor Supply Monitoring	**523602**	**12**	**P303D**	Sensor supply over temperature	
CAN	**523605**	**2**	**U1168**	DFC for DLC Error of CAN-Receive-Frame TSC1AE	
CAN	**523605**	**9**	**U1169**	Timeout Error of CAN-Receive-Frame TSC1AE	
CAN	**523606**	**2**	**U116A**	DFC for DLC Error of CAN-Receive-Frame TSC1AR	

CAN	**523606**	**9**	**U116B**	Timeout Error of CAN-Receive-Frame TSC1AR	
High Pressure System	**523613**	**0**	**P0087**	maximum positive deviation of rail pressure exceeded	
High Pressure System	**523613**	**1**	**P0087**	minimum rail pressure exceeded	
High Pressure System	**523613**	**16**	**P0088**	maximum rail pressure exceeded	
High Pressure System	**523613**	**2**	**P0252**	setpoint of metering unit in overrun mode not plausible	
Metering Unit	**523615**	**2**	**P251C**	Intermittent contact between ECU and MeUn	
Metering Unit	**523615**	**5**	**P2A15**	signal range check high error of metering unit AD-channel	
Metering Unit	**523615**	**6**	**P2A14**	signal range check low error of metering unit AD-channel	
Injection System	**523616**	**14**	**P3000**	Number of injections is limited by charge balance of booster capacity	
Glow Plugs	**523676**	**14**	**P0383**	DFC for T30 missing error in GCU-T	
Glow Plugs	**523676**	**0**	**P3055**	DFC for wrong glow plug type	
Glow Plugs	**523676**	**12**	**P0102**	DFC for glow module error in GCU-T	
Glow Plug Relay	**523677**	**5**	**P037E**	No load error for Standard Voltage System	
Glow Plug Relay	**523677**	**12**	**P037E**	Over temperature error on ECU powerstage for Glow plug Standard Voltage System	
Glow Plugs	**523677**	**3**	**P037E**	Short circuit to battery error for Standard Voltage System	
Glow Plugs	**523677**	**4**	**P037E**	Short circuit to ground error for Standard Voltage System	
CAN	**523703**	**9**	**U1146**	Timeout Error of CAN-Transmit-Frame EEC1	
CAN	**523704**	**9**	**U1148**	Timeout Error of CAN-Transmit-Frame EEC3	
CAN	**523705**	**9**	**U114B**	Timeout Error of CAN-Transmit-Frame EngTemp	
CAN	**523706**	**9**	**U1151**	Timeout Error of CAN-Transmit-Frame FlEco	
CAN	**523714**	**9**	**U112D**	Timeout Error of CAN-TransmitFrame	
CAN	**523717**	**9**	**U113B**	Timeout Error of CAN-Transmit-Frame AmbCon	
CAN	**523741**	**14**	**U114A**	Engine shut off request through CAN	
CAN	**523747**	**9**	**U1152**	Timeout Error of CAN-Transmit-Frame INCON	
Particulate Filter Lamp	**523762**	**5**	**P260E**	No load error	
Particulate Filter Lamp	**523762**	**12**	**P260E**	Over temperature error	
Particulate Filter Lamp	**523762**	**3**	**P260E**	Short circuit to battery error	
Particulate Filter Lamp	**523762**	**4**	**P260E**	Short circuit to ground error	
CAN	**523763**	**9**	**U1153**	Timeout Error of CAN-Transmit-Frame ShutDwn	

CAN	**523766**	**9**	**U1156**	Active DFC TimeOut of TSC1AE Message	
CAN	**523767**	**9**	**U1157**	Passive DFC TimeOut of TSC1AE Message	
CAN	**523768**	**9**	**U1158**	Active DFC TimeOut of TSC1AR Message	
CAN	**523769**	**9**	**U1159**	Passive DFC TimeOut of TSC1AR Message	
CAN	**523770**	**9**	**U115B**	Passive DFC TimeOut of TSC1DE Message	
CAN	**523771**	**9**	**U115A**	Passive DFC TimeOut of TSC1DE Message	
CAN	**523776**	**9**	**U1160**	Active Time out for TSC1VE	
CAN	**523777**	**9**	**U1161**	Passive Time out for TSC1TE	
CAN	**523778**	**9**	**U1162**	Active Time out for TSC1TR	
CAN	**523779**	**9**	**U1163**	Passive Time out for TSC1TR	
CAN	**523867**	**12**	**U1130**	Timeout Error of CAN-Transmit-Frame UAA1	
CAN	**523878**	**12**	**U1131**	Timeout Error of CAN-Transmit-Frame UAA1	
CAN	**523882**	**12**	**U1132**	Timeout Error of CAN-Transmit-Frame UAA3	
CAN	**523883**	**12**	**U1133**	Timeout Error of CAN-Transmit-Frame UAA4	
CAN	**523884**	**12**	**U1134**	Timeout Error of CAN-Transmit-Frame UAA5	
CAN	**523885**	**12**	**U1135**	Timeout Error of CAN-Transmit-Frame UAA6	
CAN	**523886**	**12**	**U1136**	Timeout Error of CAN-Transmit-Frame UAA7	
CAN	**523887**	**12**	**U1137**	Timeout Error of CAN-Transmit-Frame UAA8	
Intake Air Heater	**523891**	**14**	**P2608**	DFC to SRC High error when heater is Off	
Injection System	**523901**	**11**	**P0A0F**	Detection of Failed Engine Start	
Zero Fuel Learning Monitoring	**523946**	**0**	**P02CD**	DFC reporting error state on comparing energising time to Max value	
Zero Fuel Learning Monitoring	**523946**	**1**	**P02CC**	DFC reporting error state on comparing energising time to Min value	
Zero Fuel Learning Monitoring	**523947**	**0**	**P02D3**	DFC reporting error state on comparing energising time to Max value	
Zero Fuel Learning Monitoring	**523947**	**1**	**P02D2**	DFC reporting error state on comparing energising time to Min value	
Zero Fuel Learning Monitoring	**523948**	**0**	**P02CF**	DFC reporting error state on comparing energising time to Max value	
Zero Fuel Learning Monitoring	**523948**	**1**	**P02CE**	DFC reporting error state on comparing energising time to Min value	
Zero Fuel Learning Monitoring	**523949**	**0**	**P02D1**	DFC reporting error state on comparing energising time to Max value	
Zero Fuel Learning Monitoring	**523949**	**1**	**P02D0**	DFC reporting error state on comparing energising time to Min value	
Exhaust Gas Temperature Monitoring	**523961**	**3**	**P0546**	Diagnostic Fault Check for enhanced SRC-Max of First exhaust gas temperature	
Exhaust Gas Temperature Monitoring	**523961**	**4**	**P0545**	Diagnostic Fault Check for enhanced SRC-Min of First exhaust gas temperature	
Exhaust Gas Temperature Monitoring	**523961**	**2**	**P0544**	Diagnostic Fault check array for cold start condition of exhaust-gas temperature	

Exhaust Gas Temperature Monitoring	**523961**	**14**	**P0544**	Diagnostic Fault check for Model based plausiblity check of exhaust-gas temperature sensor 1	
Exhaust Gas Temperature Monitoring	**523962**	**3**	**P0549**	Diagnostic Fault Check for enhanced SRC-Max of Second exhaust gas temperature	
Exhaust Gas Temperature Monitoring	**523962**	**4**	**P0548**	Diagnostic Fault Check for enhanced SRC-Min of Second exhaust gas temperature	
Exhaust Gas Temperature Monitoring	**523962**	**2**	**P2082**	Diagnostic Fault check array for cold start condition of exhaust-gas temperature	
Exhaust Gas Temperature Monitoring	**523962**	**14**	**P2082**	Diagnostic Fault check for Model based plausiblity check of exhaust-gas temperature sensor 2	
Exhaust Gas Temperature Monitoring	**523963**	**3**	**P2033**	Diagnostic Fault Check for enhanced SRC-Max of third exhaust gas temperature	
Exhaust Gas Temperature Monitoring	**523963**	**4**	**P2032**	Diagnostic Fault Check for enhanced SRC-Min of third exhaust gas temperature	
Exhaust Gas Temperature Monitoring	**523963**	**2**	**P2084**	Diagnostic Fault check array for cold start condition of exhaust-gas temperature	
Exhaust Gas Temperature Monitoring	**523963**	**14**	**P2084**	Diagnostic Fault check for Model based plausiblity check of exhaust-gas temperature sensor 3	
Exhaust Gas Temperature Monitoring	**523964**	**3**	**P2036**	Diagnostic Fault Check for enhanced SRC-Max of Fourth exhaust gas temperature	
Exhaust Gas Temperature Monitoring	**523964**	**4**	**P2035**	Diagnostic Fault Check for enhanced SRC-Min of Fourth exhaust gas temperature	
Exhaust Gas Temperature Monitoring	**523964**	**2**	**P2086**	Diagnostic Fault check array for cold start condition of exhaust-gas temperature	
Exhaust Gas Temperature Monitoring	**523964**	**14**	**P2086**	Diagnostic Fault check for Model based plausiblity check of exhaust-gas temperature sensor 4	
Exhaust Gas Temperature Monitoring	**523965**	**3**	**P242D**	Diagnostic Fault Check for enhanced SRC-Max of fifth exhaust gas temperature	
Exhaust Gas Temperature Monitoring	**523965**	**4**	**P242C**	Diagnostic Fault Check for enhanced SRC-Min of fifth exhaust gas temperature	

Exhaust Gas Temperature Monitoring	**523965**	**2**	**P242B**	Diagnostic Fault check array for cold start condition of exhaust-gas temperature	
Exhaust Gas Temperature Monitoring	**523965**	**14**	**P242B**	Diagnostic Fault check for Model based plausiblity check of exhaust-gas temperature sensor 5	
Exhaust Gas Temperature Monitoring	**523966**	**3**	**P2469**	Diagnostic Fault Check for enhanced SRC-Max of sixth exhaust gas temperature	
Exhaust Gas Temperature Monitoring	**523966**	**4**	**P2468**	Diagnostic Fault Check for enhanced SRC-Min of sixth exhaust gas temperature	
Exhaust Gas Temperature Monitoring	**523966**	**2**	**P2467**	Diagnostic Fault check array for cold start condition of exhaust-gas temperature	
Exhaust Gas Temperature Monitoring	**523966**	**14**	**P2467**	Diagnostic Fault check for Model based plausiblity check of exhaust-gas temperature sensor 6	
Exhaust Gas Temperature Monitoring	**523967**	**2**	**P2081**	Diagnostic Fault check during cold start condition of exhaust-gas temperatures	
Performance Limiter	**523970**	**11**	**P00BB**	performance limiter is active.	
Engine Speed Output	**523994**	**5**	**P0654**	No load error on the engine speed output	
Engine Speed Output	**523994**	**12**	**P0654**	Over Temperature error on the engine speed output	
Engine Speed Output	**523994**	**3**	**P06EE**	Short circuit to battery error on the engine speed output	
Engine Speed Output	**523994**	**4**	**P06ED**	Short circuit to ground error on the engine speed output	
Performance Limiter	**523995**	**0**	**P00BB**	Third level of performance limiter is active	
ECU Internal	**524054**	**3**	**P0507**	Low-idle Speed above Limit	
ECU Internal	**524054**	**4**	**P0506**	Low-idle Speed below Limit	
ECU Internal	**524058**	**2**	**U0300**	Not plausible fault: PhyMod_trq2qBas_MAP contains non strictly monotonus g curves	
ECU Internal	**524059**	**12**	**P060B**	Diagnostic fault check to report the ADC test error	
Oxidation Catalyst Monitoring	**524059**	**1**	**P0420**	Diagnostic fault check for characteristic of OxiCat	
ECU Internal	**524060**	**12**	**P060B**	Diagnostic fault check to report the error in Voltage ratio in ADC monitoring	
Oxidation Catalyst Monitoring	**524060**	**1**	**P0420**	DFC for passive monitoring of the oxidation catalyst during rapid heat up	
ECU Internal	**524061**	**12**	**P060A**	Diagnostic fault check to report errors in query-/response-communication	
ECU Internal	**524062**	**12**	**P060A**	Diagnostic fault check to report errors in SPI-communication	

ECU Internal	**524063**	**12**	**P0605**	Diagnostic fault check to report multiple error while checking the complete ROM-memory	
ECU Internal	**524064**	**12**	**P3004**	Loss of synchronization sending bytes to the MM from CPU.	
ECU Internal	**524065**	**12**	**P3005**	DFC to set a torque limitation once an error is detected before MoCSOP's error reaction is set	
ECU Internal	**524066**	**12**	**P3006**	Wrong set response time	
ECU Internal	**524067**	**12**	**P3007**	Too many SPI errors during MoCSOP execution.	
ECU Internal	**524068**	**12**	**P3008**	Diagnostic fault check to report the error in undervoltage monitoring	
ECU Internal	**524069**	**12**	**P3009**	Diagnostic fault check to report that WDA is not working correct	
ECU Internal	**524070**	**12**	**P300A**	OS timeout in the shut off path test. Failure setting the alarm task period.	
ECU Internal	**524071**	**12**	**P300B**	Diagnostic fault check to report that the positive test failed	
ECU Internal	**524072**	**12**	**P300C**	Diagnostic fault check to report the timeout in the shut off path test	
ECU Internal	**524073**	**12**	**P300D**	Diagnostic fault check to report the error in overvoltage monitoring	
ECU Internal	**524074**	**12**	**P060D**	Diagnostic fault check to report the accelerator pedal position error	
ECU Internal	**524075**	**12**	**P061C**	Diagnostic fault check to report the engine speed error	
ECU Internal	**524076**	**12**	**P300E**	Diagnostic fault check to report the plausibility error between level 1 energizing time and level 2 information	
ECU Internal	**524077**	**12**	**P300F**	Diagnostic fault check to report the error due to plausibility between the injection begin v/s injection type	
ECU Internal	**524078**	**12**	**P3010**	Diagnostic fault check to report the error due to non plausibility in ZFC	
ECU Internal	**524079**	**12**	**P3011**	Diagnosis fault check to report the demand for normal mode due to an error in the PoI2 quantity	
ECU Internal	**524080**	**12**	**P3012**	Diagnosis fault check to report the error to demand for an ICO due to an error in the PoI2 shut-off	
ECU Internal	**524081**	**12**	**P3013**	Diagnosis fault check to report the error to demand for an ICO due to an error in the PoI3 efficiency factor	
ECU Internal	**524082**	**12**	**P061A**	Diagnostic fault check to report the error due to Over Run	

ECU Internal	**524083**	**12**	**P060F**	Diagnostic fault check to report the error due to cooling injection in Over Run	
ECU Internal	**524084**	**12**	**P3014**	Diagnostic fault check to report the error due to injection quantity correction	
ECU Internal	**524085**	**12**	**P3015**	Diagnostic fault check to report the plausibility error in rail pressure monitoring	
ECU Internal	**524086**	**12**	**P060D**	Diagnostic fault check to report the remote accelerator pedal position error	
ECU Internal	**524087**	**12**	**P061B**	Diagnostic fault check to report the error due to torque comparison	
ECU Internal	**524088**	**12**	**P061D**	Diagnosis of curr path limitation forced by ECU monitoring level 2	
ECU Internal	**524089**	**12**	**P061D**	Diagnosis of lead path limitation forced by ECU monitoring level 2	
ECU Internal	**524090**	**12**	**P061D**	Diagnosis of set path limitation forced by ECU monitoring level 2	
ECU Internal	**524091**	**3**	**P0659**	Reported OverVoltage of VDD5	
ECU Internal	**524092**	**4**	**P0658**	Reported UnderVoltage of VDD5	
ECU Internal	**524093**	**12**	**P3016**	Diagnostic fault check to report the plausibility error for Blankshot injection	
ECU Internal	**524098**	**12**	**P0607**	Diagnostic fault check to report "WDA active" due to errors in query-/response communication	
ECU Internal	**524099**	**12**	**P0607**	Diagnostic fault check to report "ABE active" due to undervoltage detection	
ECU Internal	**524100**	**12**	**P0607**	Diagnostic fault check to report "ABE active" due to overvoltage detection	
ECU Internal	**524101**	**12**	**P0607**	Diagnostic fault check to report "WDA/ABE active" due to unknown reason	
High Pressure System	**524103**	**0**	**P0088**	maximum positive deviation of rail pressure exceeded concerning set flow of fuel	
High Pressure System	**524104**	**0**	**P0093**	leakage is detected based on fuel quantity balance	
High Pressure System	**524105**	**0**	**P0088**	maximum negative rail pressure deviation with metering unit on lower limit is exceeded	
High Pressure System	**524106**	**0**	**P0088**	maximum negative rail pressure deviation with metering unit on lower limit is exceeded (second stage)	
High Pressure System	**524107**	**0**	**P0088**	maximum rail pressure exceeded (second stage)	
High Pressure System	**524108**	**0**	**P0089**	positive deviation of rail pressure under fast condition exceeded	
High Pressure System	**524109**	**0**	**P0089**	maximum rail pressure exceeded - overrun detection	
Injection System	**524110**	**14**	**P3001**	Number of injections is limited by quantity balance of high pressure pump	

Injection System	**524111**	**14**	**P3002**	Number of injections is limited by system	
Injection System	**524112**	**14**	**P3003**	Number of injections is limited by runtime	
Intake Air Heater	**524113**	**14**	**P2607**	DFC to SRC Low error when heater is Off	
Intake Air Heater	**524114**	**14**	**P0542**	DFC to SRC High error when heater is On	
Intake Air Heater	**524115**	**14**	**P0541**	DFC to SRC Low error when heater is On	
ECU Internal	**524120**	**14**	**P0607**	Visibility of SoftwareResets in DSM	
ECU Internal	**524121**	**14**	**P0607**	Visibility of SoftwareResets in DSM	
ECU Internal	**524122**	**14**	**P0607**	Visibility of SoftwareResets in DSM	
ECU Internal	**524124**	**12**	**P060B**	Diagnostic fault check to report the NTP error in ADC monitoring	
ECU Internal	**524128**	**12**	**P3058**	function monitoring: fault in the monitoring of the start control	
ECU Internal	**524131**	**12**	**P060C**	CY327 SPI Communication Error	
Creep Mode	**524131**	**31**	**P1022**		
Creep Mode	**524132**	**31**	**P1023**		
Creep Mode	**524133**	**31**	**P06EF**		
Creep Mode	**524134**	**31**	**P1024**		
Creep Mode	**524135**	**31**	**P1025**		
Oxidation Catalyst Monitoring	**524136**	**1**	**P0420**	Diagnostic fault check for active oxidation catalyst monitoring	
Particulate Filter Monitoring	**524137**	**0**	**P2459**	Diagnostic fault check for maximum number of regenerations of the particulate filter by the driver	
Particulate Filter Monitoring	**524138**	**0**	**P243A**	Diagnostic fault check for the engine protection	
Particulate Filter Monitoring	**524139**	**0**	**P246C**	Diagnostic fault check for SRC high in Flow Resistance	
Particulate Filter Monitoring	**524140**	**0**	**P246C**	Diagnostic fault check for SRC low in Flow Resistance	
High Pressure System	**524141**	**1**	**P0088**	Common DFC for negative rail pressure(pressure to high)	
High Pressure System	**524142**	**0**	**P0087**	Common DFC for positive rail pressure (pressure to low)	
High Pressure System	**524143**	**1**	**P01A9**	Common DFC for MeUn negative rail pressure(pressure to high)	
High Pressure System	**524144**	**0**	**P01A8**	Common DFC for MeUn positive rail pressure(pressure to high)	
High Pressure System	**524145**	**1**	**P01C9**	Common DFC for PCV negative rail pressure(pressure to high)	
High Pressure System	**524146**	**0**	**P01C8**	Common DFC for PCV positive rail pressure(pressure to high)	
	524148	**0**	**P3041**	Error in boost protection limitation	
Error in Limiter	**524149**	**0**	**P3042**	Error in engine protection limitation	
Error in Limiter	**524150**	**0**	**P3043**	Error in injetion systems limitation	
Error in Limiter	**524151**	**0**	**P3044**	Error in limitation	
Error in Limiter	**524153**	**0**	**P3045**	Error in differential protection	
Error in Limiter	**524154**	**0**	**P3046**	Error in performance limitation	

Error in Limiter	**524155**	**0**	**P3047**	Error in smoke limitation	
Cruise Control	**527**	**11**	**P0585**	Fault path which indicates the invalid combination of cruise control keys pressed	
Oxidation Catalyst Monitoring	**5317**	**16**	**P3017**	DFC for soot load monitoring in first threshold	
Oxidation Catalyst Monitoring	**5317**	**0**	**P3018**	DFC for soot load monitoring in first threshold	
Particulate Filter Monitoring	**5319**	**2**	**P246B**	Diagnostic fault check for driver demand regeneration button stuck	
Particulate Filter Monitoring	**5319**	**0**	**P2458**	Diagnostic fault check for a locked regeneration	
Glow Plugs	**5324**	**11**	**P0671**	Array of DFCs for failure in i+1th Glow Plug	
Glow Plugs	**5324**	**4**	**P0671**	Array of DFCs for short circuit in i+1th Glow Plug	
Glow Plugs	**5324**	**0**	**P0671**	Array of DFCs for resistance out of rane of i+1th Glow Plug	
Glow Plugs	**5324**	**14**	**P06C5**	Array of DFCs for wrong type of i+1th Glow Plug	
Glow Plugs	**5325**	**11**	**P0672**	Array of DFCs for failure in i+1th Glow Plug	
Glow Plugs	**5325**	**4**	**P0672**	Array of DFCs for short circuit in i+1th Glow Plug	
Glow Plugs	**5325**	**0**	**P0672**	Array of DFCs for resistance out of rane of i+1th Glow Plug	
Glow Plugs	**5325**	**14**	**P06C6**	Array of DFCs for wrong type of i+1th Glow Plug	
Glow Plugs	**5326**	**11**	**P0673**	Array of DFCs for failure in i+1th Glow Plug	
Glow Plugs	**5326**	**4**	**P0673**	Array of DFCs for short circuit in i+1th Glow Plug	
Glow Plugs	**5326**	**0**	**P0673**	Array of DFCs for resistance out of rane of i+1th Glow Plug	
Glow Plugs	**5326**	**14**	**P06C7**	Array of DFCs for wrong type of i+1th Glow Plug	
Glow Plugs	**5327**	**11**	**P0674**	Array of DFCs for failure in i+1th Glow Plug	
Glow Plugs	**5327**	**4**	**P0674**	Array of DFCs for short circuit in i+1th Glow Plug	
Glow Plugs	**5327**	**0**	**P0674**	Array of DFCs for resistance out of rane of i+1th Glow Plug	
Glow Plugs	**5327**	**14**	**P06C8**	Array of DFCs for wrong type of i+1th Glow Plug	
Glow Plugs	**5328**	**11**	**P0675**	Array of DFCs for failure in i+1th Glow Plug	
Glow Plugs	**5328**	**4**	**P0675**	Array of DFCs for short circuit in i+1th Glow Plug	
Glow Plugs	**5328**	**0**	**P0675**	Array of DFCs for resistance out of rane of i+1th Glow Plug	
Glow Plugs	**5328**	**14**	**P06C9**	Array of DFCs for wrong type of i+1th Glow Plug	

Glow Plugs	**5329**	**11**	**P0675**	Array of DFCs for failure in i+1th Glow Plug	
Glow Plugs	**5329**	**4**	**P0675**	Array of DFCs for short circuit in i+1th Glow Plug	
Glow Plugs	**5329**	**0**	**P0675**	Array of DFCs for resistance out of rane of i+1th Glow Plug	
Glow Plugs	**5329**	**14**	**P06CA**	Array of DFCs for wrong type of i+1th Glow Plug	
Turbo Charger Actuator	**5369**	**3**	**P2103**		
Turbo Charger Actuator	**5369**	**4**	**P2102**		
Throttle Valve. Drosselklappe.	**5375**	**5**	**P2100**		
Throttle Valve. Drosselklappe.	**5375**	**6**	**P2118**		
Throttle Valve. Drosselklappe.	**5375**	**3**	**P2103**		
Throttle Valve. Drosselklappe.	**5375**	**4**	**P2102**		
Throttle Valve. Drosselklappe.	**5375**	**8**	**P211E**		
Throttle Valve. Drosselklappe.	**5375**	**11**	**P211C**		
Throttle Valve. Drosselklappe.	**5375**	**14**	**P211D**		
Throttle Valve. Drosselklappe.	**5377**	**3**	**P2103**		
Throttle Valve. Drosselklappe.	**5377**	**4**	**P2102**		
Turbo Charger Actuator	**5386**	**5**	**P0045**		
Turbo Charger Actuator	**5386**	**12**	**P0046**		
Turbo Charger Actuator	**5386**	**3**	**P006F**		
Turbo Charger Actuator	**5386**	**4**	**P006E**		
Fuel Filter Downstream Pressure Sensor	**5579**	**3**	**P018D**	Short circuit to battery error on fuel filter clog detection sensor ecu pin	
Fuel Filter Downstream Pressure Sensor	**5579**	**4**	**P018C**	Short circuit to ground error on fuel filter clog detection ECU pin	
Brake System	**5609**	**31**	**P056C**	Plausibility check for Brake	

Brake System	**5609**	**14**	**P0565**	Plausibility check for Brake	
PFM	**5631**	**3**	**P302E**	DFC: SRC high in Throttle Valve. Drosselklappe. Drosselklappe upstream pressure sensor Bank1	
PFM	**5631**	**4**	**P302F**	DFC: SRC low in Throttle Valve. Drosselklappe. Drosselklappe upstream pressure sensor Bank1	
PFM	**5631**	**9**	**P3030**	Plausibility high fault boost pressure sensor bank1	
PFM	**5631**	**10**	**P3031**	Plausibility low fault boost pressure sensor bank1	
PFM	**5631**	**0**	**P3032**	Physical Range high fault boost pressure sensor bank1	
PFM	**5631**	**1**	**P3033**	Physical Range low fault boost pressure sensor bank1	
PFM	**5631**	**16**	**P3034**	Fault boost pressure sensor range high bank1	
PFM	**5631**	**18**	**P3035**	Fault boost pressure sensor range low bank1	
PFM	**5631**	**12**	**P3036**	Fault boost pressure sensor self diagnosis bank1	
EGR Valve	**5763**	**5**	**P0403**		
EGR Valve	**5763**	**6**	**P2413**		
EGR Valve	**5763**	**12**	**P2413**		
EGR Valve	**5763**	**3**	**P2142**		
EGR Valve	**5763**	**4**	**P213C**		
EGR Valve	**5763**	**11**	**P0488**		
EGR Valve	**5770**	**3**	**P213D**		
EGR Valve	**5770**	**4**	**P2141**		
EGR Valve	**5770**	**6**	**P0488**		
EGR Valve	**5771**	**4**	**P0404**		
Throttle Valve. Drosselklappe. Drosselklappe	**5784**	**12**	**P211C**		
Oxidation Catalyst Upstream Temperature	**5797**	**2**	**P2080**	Diagnostic fault check for Plausibility errors in Oxidation Catalyst upstream temperature	
Oxidation Catalyst Upstream Temperature	**5797**	**0**	**P242B**	Physical Range Check high for temperature sensor upstream oxidation catalyst	
Oxidation Catalyst Upstream Temperature	**5797**	**1**	**P242B**	Physical range check low for temperature sensor upstream oxidation catalyst	
Oxidation Catalyst Upstream Temperature Sensor	**5797**	**3**	**P242D**	Diagnostic fault check for SRC high in Oxidation Catalyst upstream temperature	

Oxidation Catalyst Upstream Temperature Sensor	**5797**	**4**	**P242C**	Diagnostic fault check for SRC low in Oxidation Catalyst upstream temperature	
Cruise Control	**5826**	**0**	**P0574**		
Brake System	**597**	**2**	**P0504**	Plausibility check for Brake. Hatz Update faulty. Please contact Hako- Customerservice.	Plausibility check for Brake.Bei Hatz Update wurde ein falscher Motordatensatz auf das Steuergerät geschrieben. Bitte kontaktieren Sie den Kundendienst OD.
Brake System	**597**	**7**	**P0504**	Plausibility check for Brake. Hatz Update faulty. Please contact Hako Customerservice.	Plausibility check for Brake.Bei Hatz Update wurde ein falscher Motordatensatz auf das Steuergerät geschrieben. Bitte kontaktieren Sie den Kundendienst OD.
Clutch	**598**	**2**	**P083F**	Plausibility check for Clutch	
Clutch	**598**	**19**	**P0830**	Sig Error for Clutch	
CAN	**604**	**12**	**P3060**	DLC Error of CAN-Receive-Frame ETC5	
CAN	**604**	**9**	**P3061**	Timeout Error of CAN-Receive-Frame ETC5	
Gear Neutral Switch	**604**	**2**	**P07B7**	Alive Detection for Gbx_stNPos	
Gear Neutral Switch	**604**	**0**	**P084F**	Plausibility check for Gbx SCB	
Gear Neutral Switch	**604**	**1**	**P084F**	Plausibility check for Gbx SCG	
Gear Neutral Switch	**604**	**2**	**P084F**	Check for error for CAN input	
Stop Lamp	**623**	**5**	**P06F4**	No load error	
Stop Lamp	**623**	**12**	**P06F4**	No load error	
Stop Lamp	**623**	**3**	**P06F4**	Short circuit to battery error	
Stop Lamp	**623**	**4**	**P06F4**	Short circuit to ground error	
Pressure Control Valve	**633**	**0**	**P3023**	lerning valu too high	
Pressure Control Valve	**633**	**1**	**P3024**	lerning value too low	
Pressure Control Valve	**633**	**16**	**P3025**	lerning factor too high	
Pressure Control Valve	**633**	**18**	**P3026**	lerning factor too low	
Pressure Control Valve	**633**	**7**	**P3027**	number of startup attempts exceeded the limit	
Starter Relay	**6385**	**12**	**P0615**	Over temperature error for Starter high side	
Starter Relay	**6385**	**3**	**P0617**	Short circuit to battery error for Starter high side	
Starter Relay	**6385**	**4**	**P0616**	Short circuit to ground error for Starter high side	
CAN	**639**	**14**	**U0073**	BusOff error CAN A	
Turbo Charger Actuator	**641**	**8**	**P2563**		

Turbo Charger Actuator	**641**	**5**	**P2100**		
Turbo Charger Actuator	**641**	**6**	**P2118**		
Turbo Charger Actuator	**641**	**12**	**P211C**		
Turbo Charger Actuator	**641**	**14**	**P211E**		
Turbo Charger Actuator	**641**	**4**	**P211D**		
Injection System	**651**	**5**	**P21CF**	Open load on the power stage	
Injection System	**651**	**3**	**P0261**	Short circuit of the power stage low-side (cylinder error)	
Injection System	**651**	**4**	**P0262**	Short circuit between high-side and low-side of the power stage (high-side non plausible error)	
Injection System	**651**	**14**	**P02EE**	measured injection closing time exceeds a limit	
Injection System	**651**	**13**	**P268C**	check of missing injector adjustment value programming	
Injection System	**652**	**5**	**P21D2**	Open load on the power stage	
Injection System	**652**	**3**	**P0270**	Short circuit of the power stage low-side (cylinder error)	
Injection System	**652**	**4**	**P0271**	Short circuit between high-side and low-side of the power stage (high-side non plausible error)	
Injection System	**652**	**14**	**P02F1**	measured injection closing time exceeds a limit	
Injection System	**652**	**13**	**P268D**	check of missing injector adjustment value programming	
Injection System	**653**	**5**	**P21D0**	Open load on the power stage	
Injection System	**653**	**3**	**P0264**	Short circuit of the power stage low-side (cylinder error)	
Injection System	**653**	**4**	**P0265**	Short circuit between high-side and low-side of the power stage (high-side non plausible error)	
Injection System	**653**	**14**	**P02EF**	measured injection closing time exceeds a limit	
Injection System	**653**	**13**	**P268E**	check of missing injector adjustment value programming	
Injection System	**654**	**5**	**P21D1**	Open load on the power stage	
Injection System	**654**	**3**	**P0267**	Short circuit of the power stage low-side (cylinder error)	
Injection System	**654**	**4**	**P0268**	Short circuit between high-side and low-side of the power stage (high-side non plausible error)	

Injection System	**654**	**14**	**P02F0**	measured injection closing time exceeds a limit	
Injection System	**654**	**13**	**P268F**	check of missing injector adjustment value programming	
Pre Supply Pump	**6719**	**5**	**P025A**	open load of pre-supply pump output	
Pre Supply Pump	**6719**	**12**	**P025B**	Over temperature error on ECU powerstage for Pre supply pump	
Pre Supply Pump	**6719**	**3**	**P025D**	short circuit to battery of pre-supply pump output	
Pre Supply Pump	**6719**	**4**	**P025C**	short circuit to ground of pre-supply pump output	
Glow Lamp	**675**	**5**	**P0381**	No load error	
Glow Lamp	**675**	**12**	**P0381**	Over temperature error	
Glow Lamp	**675**	**3**	**P0381**	Short circuit to battery error	
Glow Lamp	**675**	**4**	**P0381**	Short circuit to ground error	
Glow Plugs	**676**	**21**	**P00F7**	DFC for coding error when selected coding is not working	
Glow Plugs	**676**	**11**	**P00F8**	DFC for faulty diagnostic data transmission or protocol error	
Glow Plugs	**676**	**2**	**P00F6**	DFC for coding error when different coding words were received in a coding cycle	
Glow Plug Relay	**676**	**5**	**P00F4**	No load error for Low Voltage System	
Glow Plug Relay	**676**	**12**	**P00F5**	Over temperature error on ECU powerstage for Glow plug Low Voltage System	
Glow Plug Relay	**676**	**3**	**P00F2**	Short circuit to battery error for Low Voltage System	
Glow Plug Relay	**676**	**4**	**P00F3**	Short circuit to ground error for Low Voltage System	
Glow Plugs	**676**	**13**	**P0383**	DFC for SVS GCU faulty diagnostic glow plug or relay error	
Glow Plugs	**676**	**9**	**P0383**	DFC for SVS GCU faulty diagnostic sticking relaycerror	
Starter Relay	**677**	**0**	**P303F**	only a dummy - do not use!	
Starter Relay	**677**	**12**	**P06E9**	Over temperature error for Starter low side	
Starter Relay	**677**	**3**	**P26E4**	Short circuit to battery error for Starter low side	
Starter Relay	**677**	**4**	**P26E5**	Short circuit to ground error for Starter low side	
Starter Relay	**677**	**5**	**P001A**	No load error for Starter	
Terminal 50	**677**	**10**	**P2533**	Defective T50 switch	
Hand Brake Switch	**70**	**2**	**P05E7**	Alive Detection for HndBrk_stDebVal	
Air Filter Lamp	**702**	**5**	**P005D**	No load error	
Air Filter Lamp	**702**	**12**	**P005E**	Over temperature error	
Air Filter Lamp	**702**	**3**	**P005B**	Short circuit to battery error	
Air Filter Lamp	**702**	**4**	**P005C**	Short circuit to ground error	
Oil Pressure Lamp	**705**	**5**	**P1665**	defect fault check for open load error	
Oil Pressure Lamp	**705**	**12**	**P1665**	defect fault check for over temperature error	

Oil Pressure Lamp	**705**	**3**	**P1665**	defect fault check for short circuit to battery error	
Oil Pressure Lamp	**705**	**4**	**P1665**	defect fault check for short circuit to ground error	
Intake Air Heater	**729**	**9**	**P2604**	DFC to indicate to an always switched ON Grid Heater	
Intake Air Heater	**729**	**5**	**P0540**	DFC for open load on power stage for intake air heaters	
Intake Air Heater	**729**	**12**	**P0640**	DFC for over temperature on power stage for intake air heaters	
Intake Air Heater	**729**	**3**	**P0542**	DFC for short circuit to battery on power stage for intake air heaters	
Intake Air Heater	**729**	**4**	**P0541**	DFC for short circuit to ground on power stage for intake air heaters	
Intake Air Heater	**729**	**2**	**P20F8**	DFC for short circuit to ground, Over Current, Over Temperature in the Intake Air Heater feedback diagnosis line	
Intake Air Heater	**730**	**2**	**P20F9**	DFC for Open load in the Intake Air Heater feedback diagnosis line	
Energizing Time Control	**7332**	**16**	**P1F0A**	Error path for not reaching the setpoint of the inner loop with maximal control variable	
Energizing Time Control	**7332**	**18**	**P1F0B**	Error path for not reaching the setpoint of the inner loop with minimal control variable	
Energizing Time Control	**7332**	**9**	**P1F0C**	Error path for response time of inner loop	
Energizing Time Control	**7332**	**15**	**P244C**	Error path for not reaching the setpoint of the outer loop with maximal control variable	
Energizing Time Control	**7332**	**17**	**P244D**	Error path for not reaching the setpoint of the outer loop with minimal control variable	
Energizing Time Control	**7332**	**10**	**P1F0E**	Error path for response time of outer loop	
Glow Control Unit	**7576**	**2**	**P0683**	DFC for error in reception	
Glow Control Unit	**7576**	**4**	**P0670**	DFC for chargepump under voltage	
Glow Control Unit	**7576**	**3**	**P064C**	DFC for Over Voltage error	
Glow Control Unit	**7576**	**12**	**P064C**	DFC for PRFlag =0 if GE_SET has been sent	
Glow Control Unit	**7576**	**14**	**P06E5**	DFC for T30 missing error	
Glow Control Unit	**7576**	**31**	**P06DF**	DFC for GCU4 variant error	
Glow Control Unit	**7576**	**13**	**P06DF**	DFC for wrong GCU type	
Glow Control Unit	**7577**	**12**	**P263E**	DFC for Over temperature error	
CAN	**7759**	**2**	**U0120**	Non Plausible check Error of CAN-Receive- Frame Cab Message 1	
Vehicle Speed Sensor	**84**	**0**	**P0297**	Maximum threshold error for vehicle speed	
	84	**5**	**P2161**	NPL error for vehicle speed signal over Tachomter or hardware sensor	
Vehicle Speed Sensor	**84**	**13**	**P0500**	Plausibility defect for vehicle speed	
Vehicle Speed Sensor	**84**	**3**	**P0503**	signal level low error for vehicle speed signal over Tachomter or hardware sensor	

	84	**4**	**P0502**	signal level low error for vehicle speed signal over Tachomter or hardware sensor	
Air Condition Compressor	**876**	**5**	**P0645**	No load error on power stage for the compressor	
Air Condition Compressor	**876**	**12**	**P0645**	Over temperature error on powerstage for the compressor	
Air Condition Compressor	**876**	**3**	**P0647**	Short circuit to battery error on power stage for the compressor	
Air Condition Compressor	**876**	**4**	**P0646**	Short circuit to ground error on power stage for the compressor	
CAN	**898**	**2**	**U1172**	DFC for DLC Error of CAN-Receive-Frame TSC1TE	
APP Poti 1	**91**	**3**	**P0123**	Signal Range Check High for APP1	
APP Poti 1	**91**	**4**	**P0122**	Signal Range Check Low for APP1	
APP Synchronsition Error	**91**	**11**	**P2135**	In case of dual analog accelerator pedal, it is the plausibility check between APP1 and APP2 and in case of potentiometer switch accelerator pedal, it is the plausibility check between APP1 and idle switch	
APP Synchronsition Error	**91**	**2**	**P210E**	In case of Double Poti LIS acceleration pedal there are 2 analog accelerator pedal potentiometers and a low idle switch. It is the plausibility check between APP1 , APP2 and idle switch.	
Fuel Low Pressure System	**94**	**9**	**P01C7**	Maximum fuel pressure error in dynamic plausibility test	
Fuel Low Pressure System	**94**	**10**	**P01C7**	Minimum fuel pressure error in dynamic plausibility test	
Fuel Low Pressure System	**94**	**13**	**P01C4**	Low fuel pressure error monitoring	
Fuel Low Pressure System	**94**	**19**	**P01C4**	DFC for CAN message	
Fuel Low Pressure Sensor	**95**	**3**	**P01C5**	SRC High for Environment Pressure	
Fuel Low Pressure Sensor	**95**	**4**	**P01C6**	SRC low for Environment Pressure	
Fuel Level Plausibility	**96**	**2**	**P0460**	Fuel Level Sensor Plausibility Error	
Fuel System	**96**	**1**	**P0313**	fuel tank below critical level or danger of an air contaminated hydraulic system	
Water in Fuel	**97**	**15**	**P0117**	Water in fuel detected	
Water in Fuel	**97**	**31**	**P2269**	Error in water in Fuel Detection switch	
Fuel Level	**97**	**17**	**P011F**	Fuel Level unplausible	
Fan	**975**	**5**	**P0481**	No load error	
Fan	**975**	**12**	**P0481**	Over temperature error	
Fan	**975**	**3**	**P0694**	Short circuit to battery error	
Fan	**975**	**4**	**P0693**	Short circuit to ground error	

Fan	**975**	**8**	**P0480**	No load error	
Fan	**975**	**14**	**P0480**	Over temperature error	
Fan	**976**	**5**	**P0482**	No load error	
PTO	**976**	**3**	**P251A**	Diagnostic fault check for max error of COM message	
PTO	**976**	**4**	**P251B**	Diagnostic fault check for min error of COM message	
Fan	**977**	**3**	**P0696**	Short circuit to battery error	
Fan	**977**	**4**	**P0695**	Short circuit to ground error	
Fan	**977**	**5**	**P0692**	Short circuit to battery error	
Fan	**977**	**6**	**P0691**	Short circuit to ground error	
Oil Level	**98**	**3**	**P252F**	Duty cycle greater than maximum	
Oil Level	**98**	**4**	**P250F**	Duty cycle lesser than minimum	
Oil Level	**98**	**2**	**P250A**	Plausibility Check	
Oil Level	**98**	**0**	**P250B**	Plausibility Check	
Oil Level	**98**	**1**	**P250B**	Plausibility Check	
CAN	**986**	**12**	**P0258**	DFC for DLC Error of CAN-Receive-Frame Cab Message 1	
CAN	**986**	**9**	**P0258**	Timeout Error of CAN-Receive-Frame Cab Message 1	
SVS	**987**	**5**	**P1650**	No load error	
SVS	**987**	**12**	**P1650**	No load error	
SVS	**987**	**3**	**P163B**	Short circuit to battery error	
SVS	**987**	**4**	**P163A**	Short circuit to ground error	

Displayanzeigen

DPF

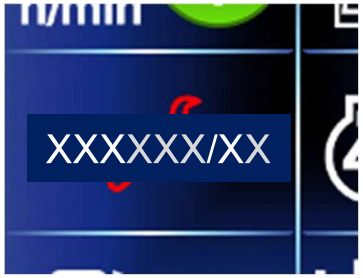

Fehlermeldung als SPN/FMI Code
SPN 3-6stellig / FMI 1-2stellig
Fehlermeldung s. Kapitel 9.0.6

Störung Motor od. Fahrantrieb

(blinkend) Motorfehler

Limb Home Modus aktiviert

Luftfilter Verstopfung Warnung

DPF Fehler

DPF Regeneration erforderlich

Regeneration gesperrt

Aktive Regeneration läuft

Display indications

DPF

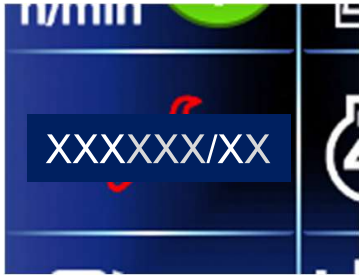

Error message as SPN / FMI code
SPN 3-6-digit / FMI 1-2-digit
Error message s. Chapter 9.0.6

Engine or drive foult

(flashing) engine foult

Limb Home Modus aktivated

Warning air filter clogged

Error in the DPF

DPF regeneration required

Regeneration locked

Active regeneration is running

Übersicht Motorenteile

Ansicht rechts

Right view of the Engine

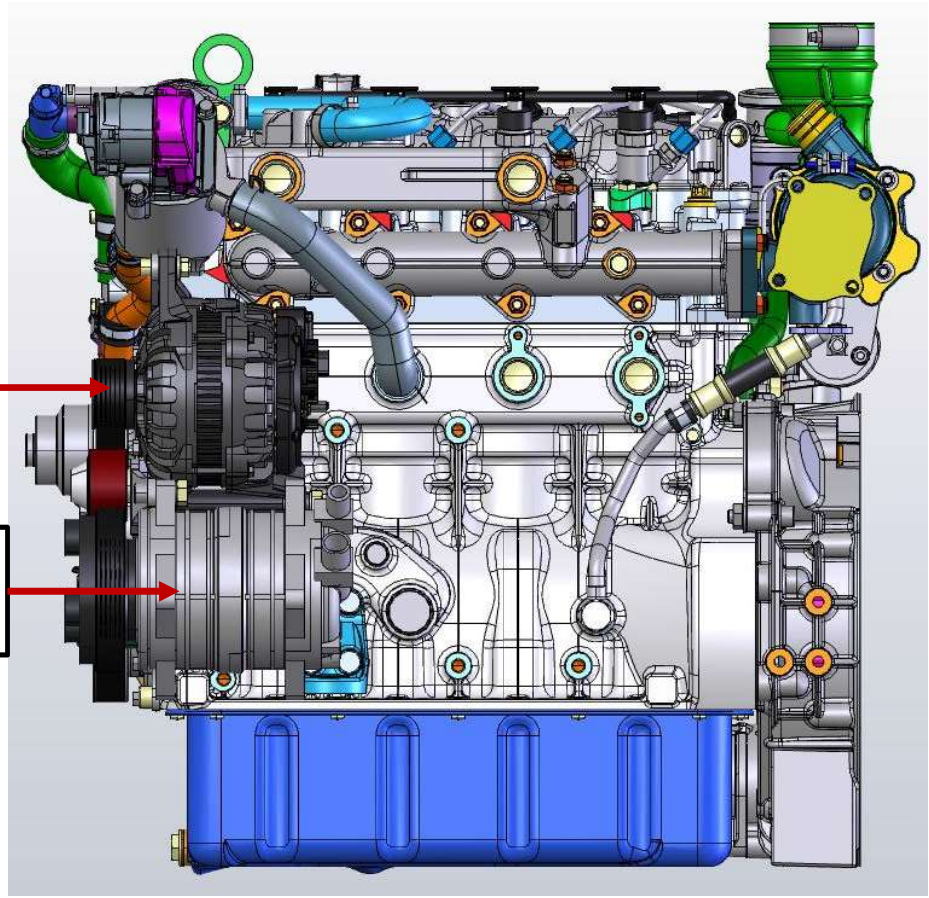

Fahrtrichtung - Driving Direction

Übersicht Motorenteile

Ansicht links

Left view of the Engine

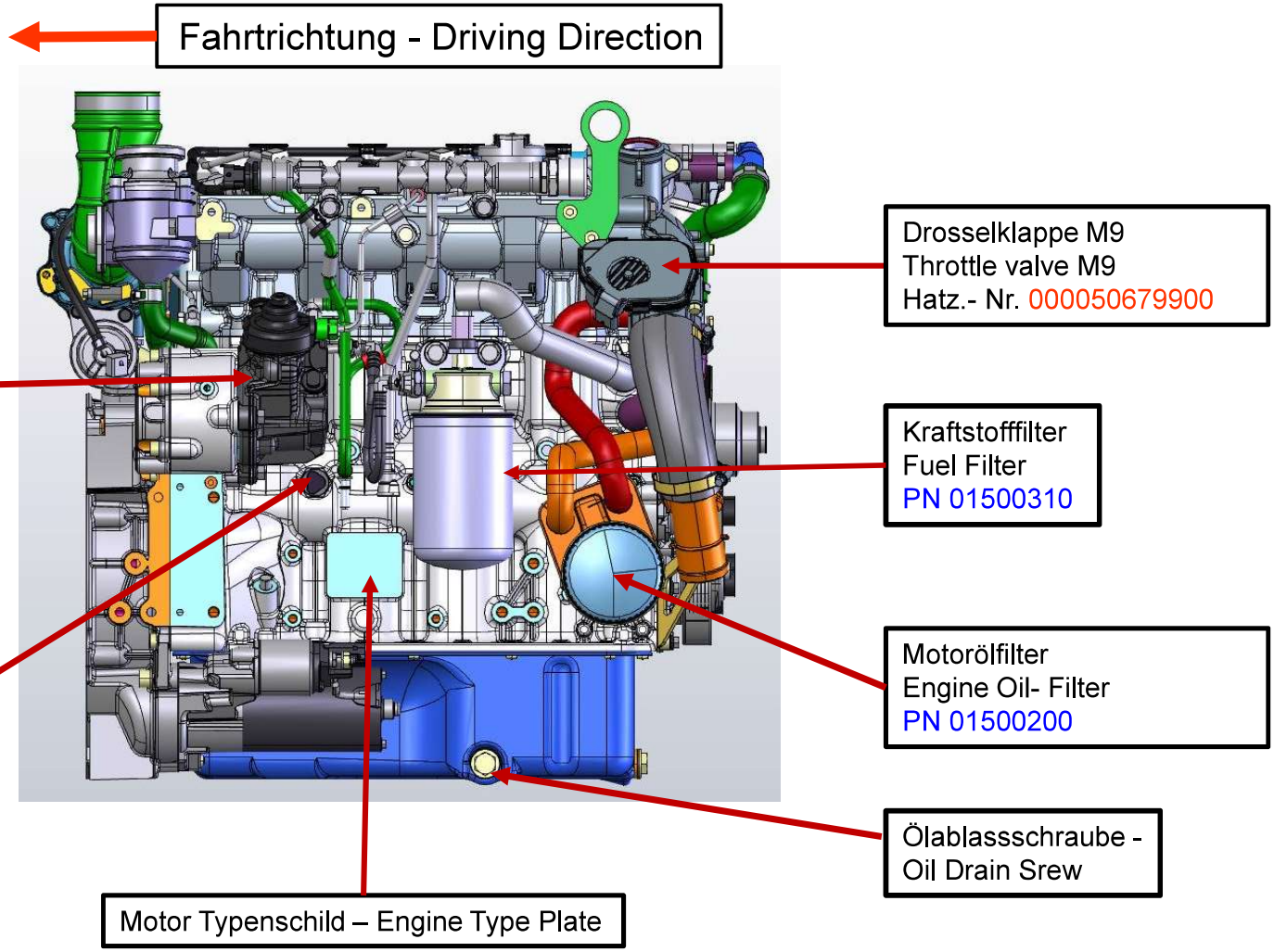

Übersicht Motorenteile

Ansicht links

Left view of the Engine

Kurbelwellen-Drehzahlsensor B5
Crankshaft Sensor B5

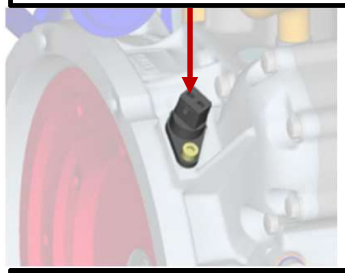

Öldruck- und Temperatursensor B9
Oil pressure and temperature sensor B9

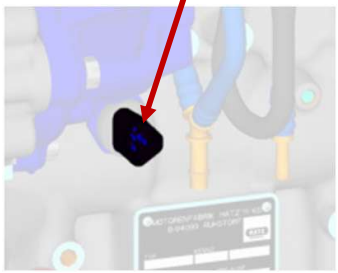

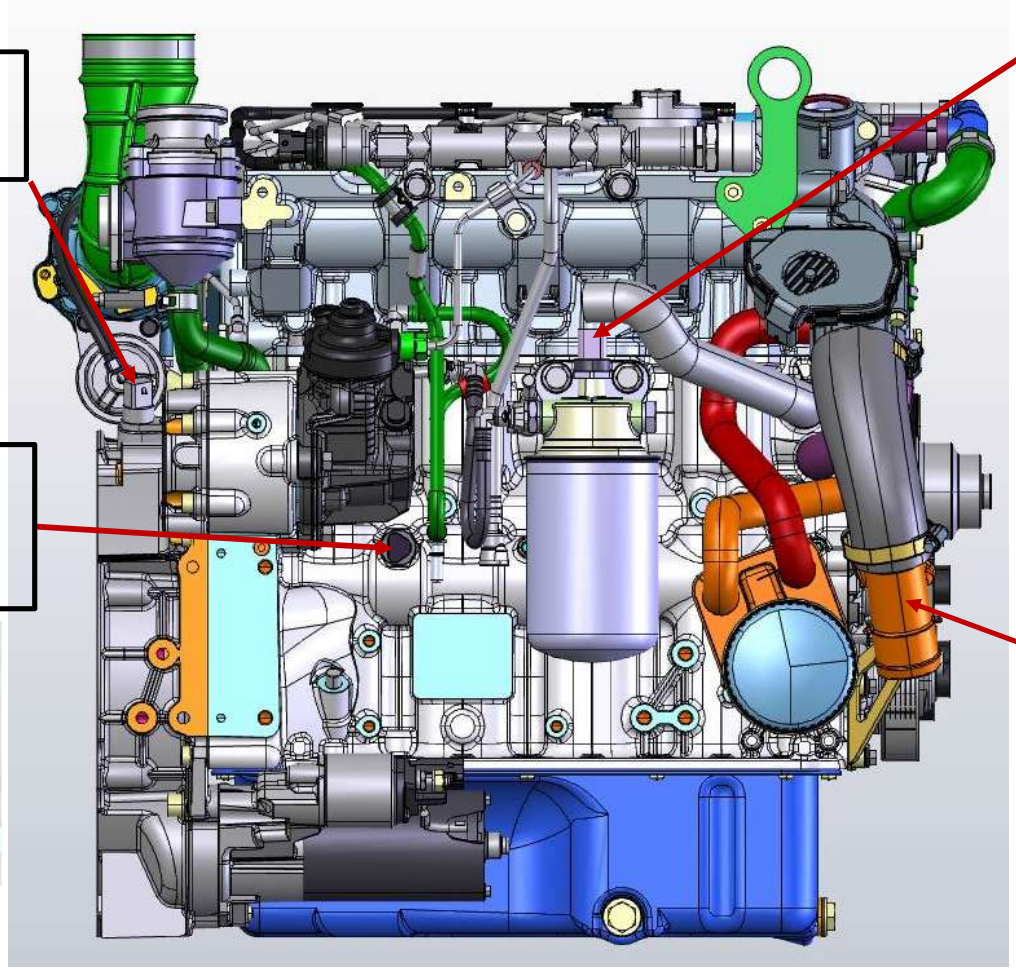

Kraftstoff Niederdruck- und Temperatursensor B3
Fuel low pressure and temperature sensor B3

PFM- Sensor B32
(Luftmassenmesser)
PFM- Sensor B32
(Air Rate Meter)
PN 01503580

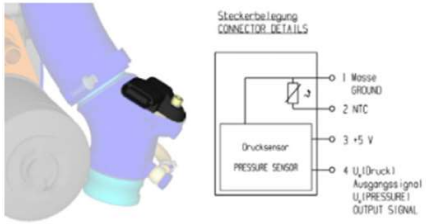

Fahrtrichtung - Driving Direction

Übersicht Motorenteile

Ansicht links

Left view of the Engine

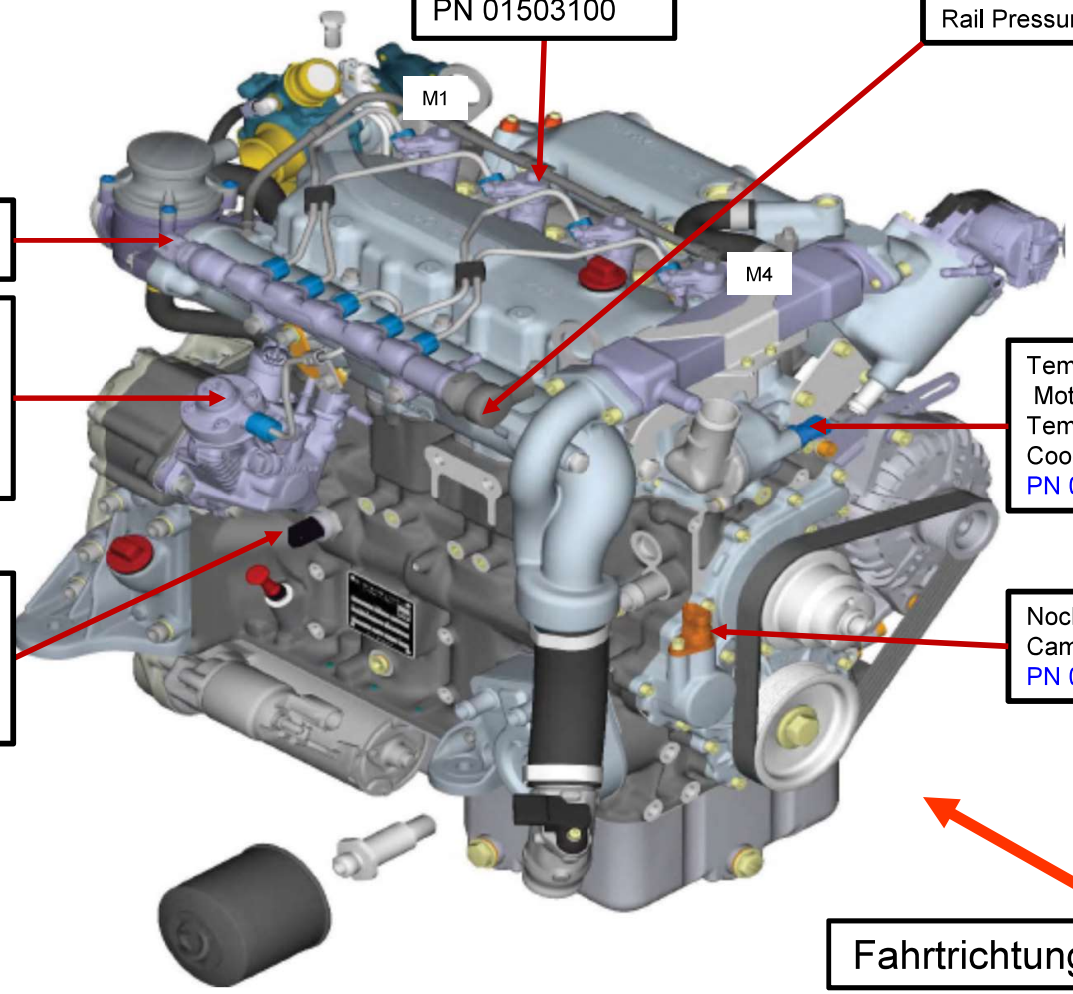

Injektoren
M1- Zylinder 1
M2- Zylinder 2
M3- Zylinder 3
M4- Zylinder 4
PN 01503100

Rail- Druckregelventil K1
Rail Pressure Control Valve K1

Raildrucksensor B1
Rail Pressure Sensor B1

Hochdruck- Pumpe,
mit Kraftstoff- Zumess-
Einheit K2
High pressure pump,
with Fuel Metering Unit K2
PN 01503410

Temperatursensor
Motor- Kühlmittel B4
Temperature- Sensor Engine
Coolant B4
PN 01503780

Öldruck- und
Öl- Temperatursensor B9
Oil- Pressure and
Oil-Temprature Sensor B9
PN 01503310

Nockenwellen- Drehzahlsensor B6
Camshaft- Speed Sensor B6
PN 01503590

Fahrtrichtung - Driving Direction

Kraftstoff-Hochdrucksystem

Rail-System

Übersicht

Overview

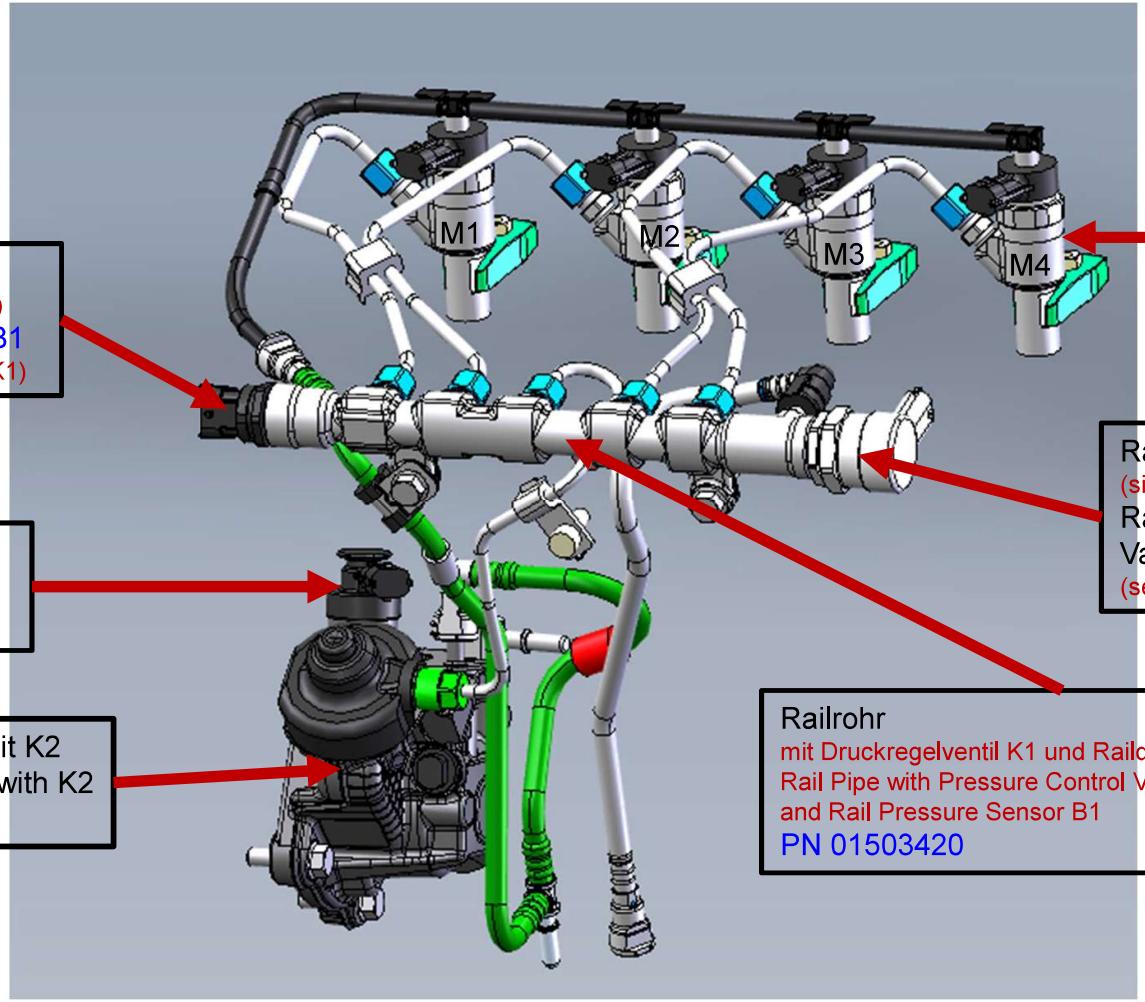

Injektoren- Injectors
M1- Zylinder 1
M2- Zylinder 2
M3- Zylinder 3
M4- Zylinder 4
PN 01503100

Raildrucksensor B1
(siehe Railrohr mit B1 + K1)
Rail Pressure Sensor B1
(see Rail Pipe with B1 andK1)

Rail- Druckregelventil K1
(siehe Railrohr mit B1 + K1)
Rail Pressure Control Valve K1
(see Rail Pipe with B1 and K1)

Zumesseinheit K2
an der HD- Pumpe
Fuel Metering Unit K2

Hochdruck- Pumpe mit K2
High Pressure Pump with K2
PN 01503410

Railrohr
mit Druckregelventil K1 und Raildrucksensor B1
Rail Pipe with Pressure Control Valve K1
and Rail Pressure Sensor B1
PN 01503420

Übersicht Motorenteile

Ansicht oben

Top view of the Engine

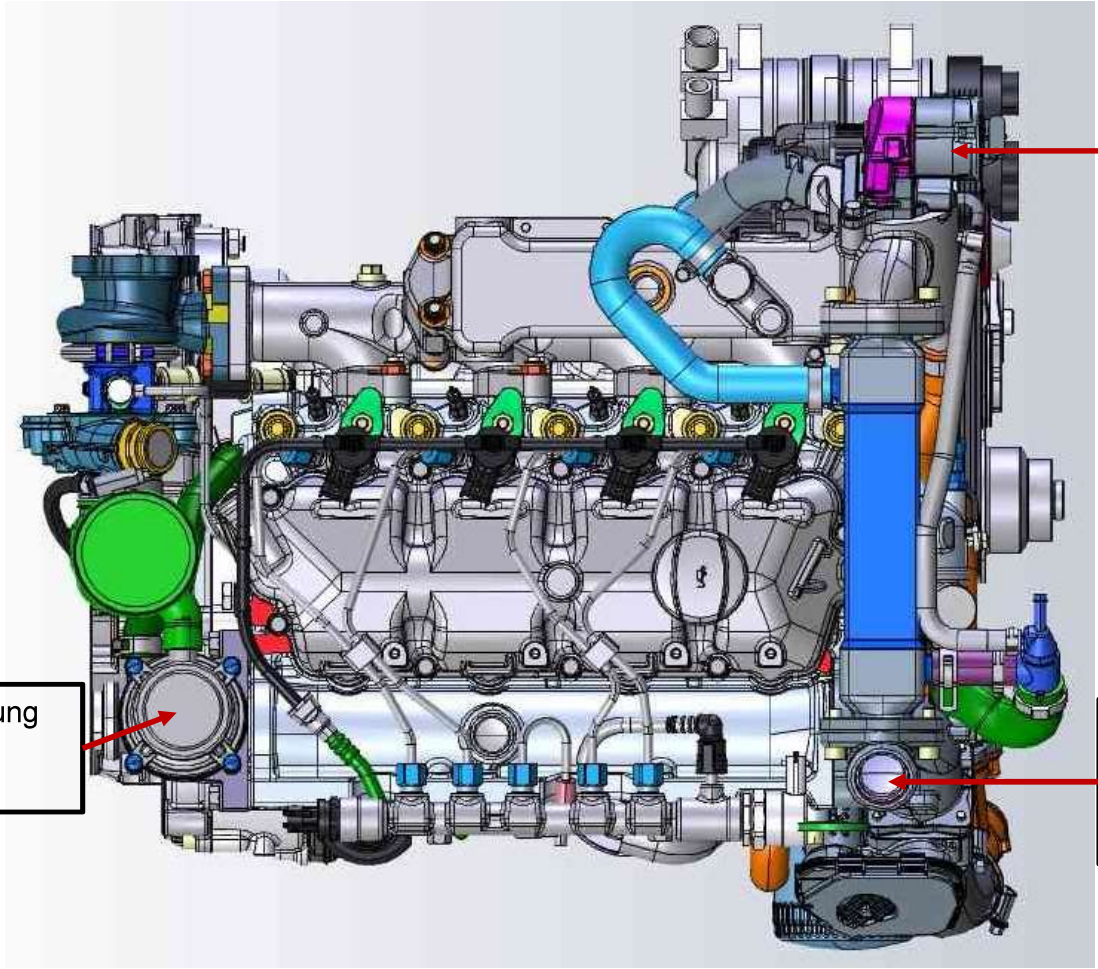

AGR- Ventil M8
(Ventil für Abgasrückführung)
EGR- Valve M8
(Valve for Exhaust Gas Recirculation)
PN 01503060

Kurbelgehäuse- Entlüftung
Cankcase Ventilation
PN 01501990

Drosselklappe M9
Throttle Valve M9
Hatz.- Nr.
000050679900

Fahrtrichtung - Driving Direction

Übersicht Motorenteile

Ansicht hinten

Rear view of the Engine

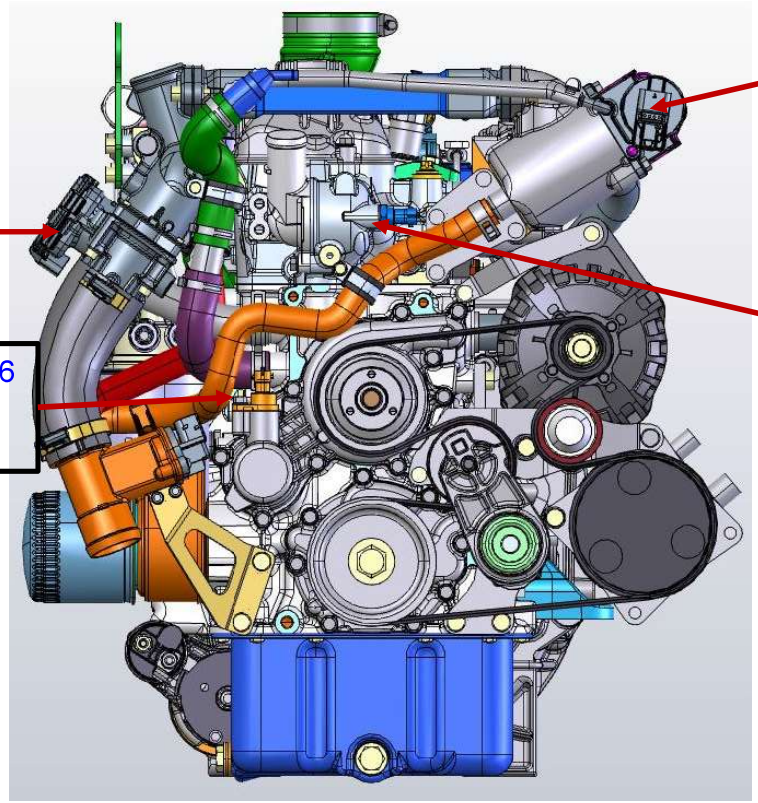

AGR Ventil M8
EGR Valve M8
PN 01503060

Drosselklappe M9
Throttle Valve M9
Hatz.- Nr. 000050679900

Nockenwellen- Drehzahlsensor B6
Camshaft- Speed Sensor B6
PN 01503590

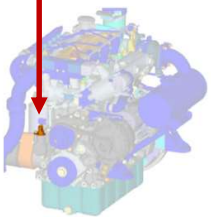

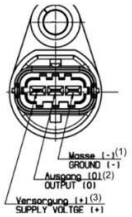

Temperatursensor
Motor- Kühlmittel B4
Temperature- Sensor
Engine Coolant B4
PN 01503780

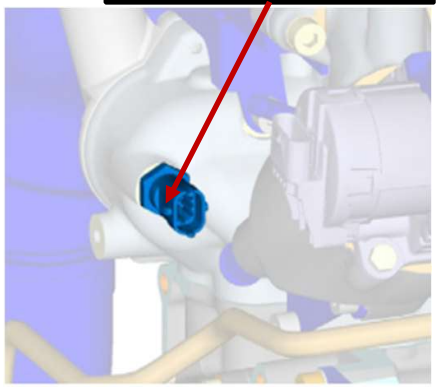

Fahrtrichtung - Driving Direction

Übersicht Motorenteile

Frischluftsystem

Intake Air

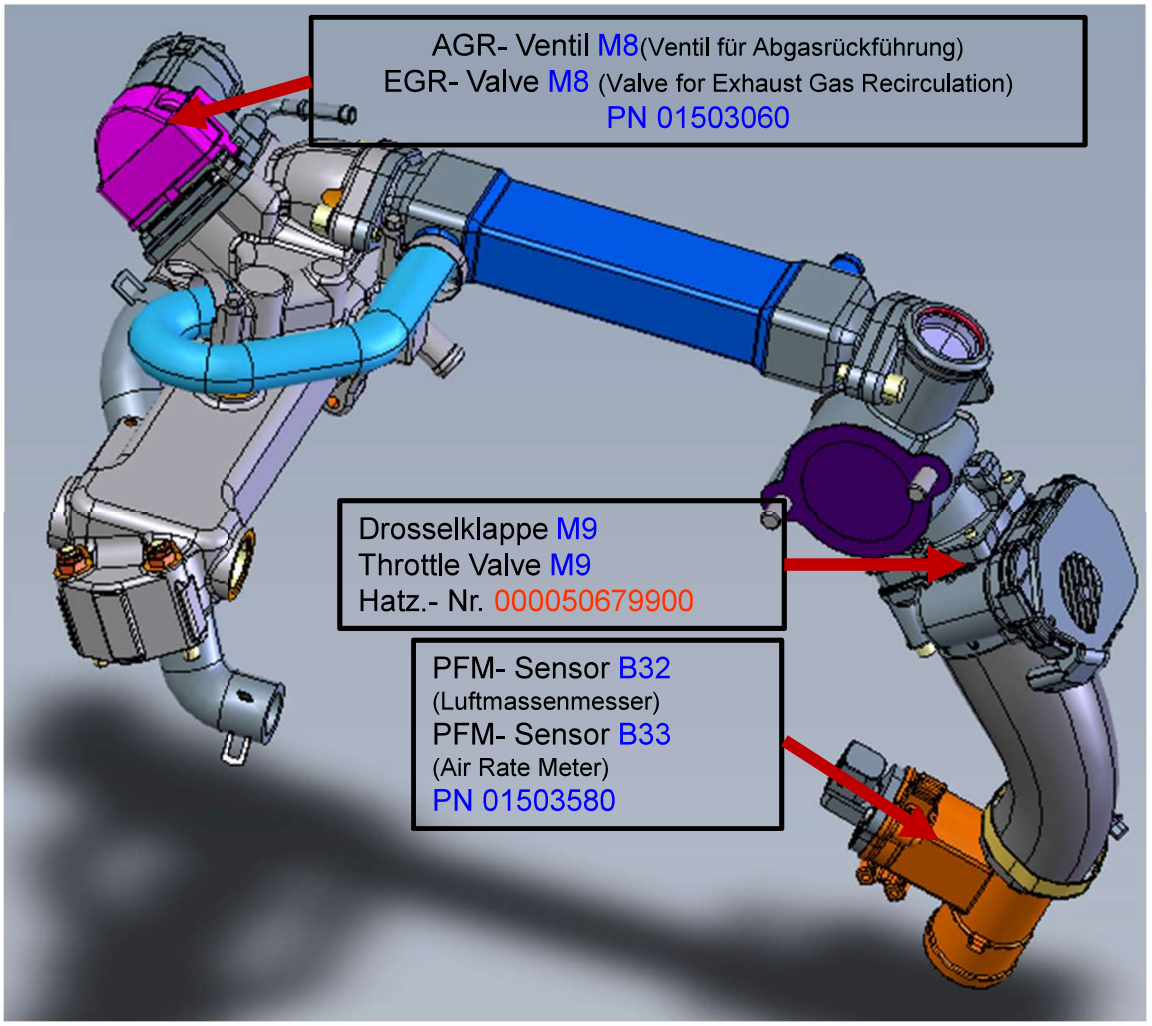

Übersicht Motorenteile

Ansicht unten

Bottom view

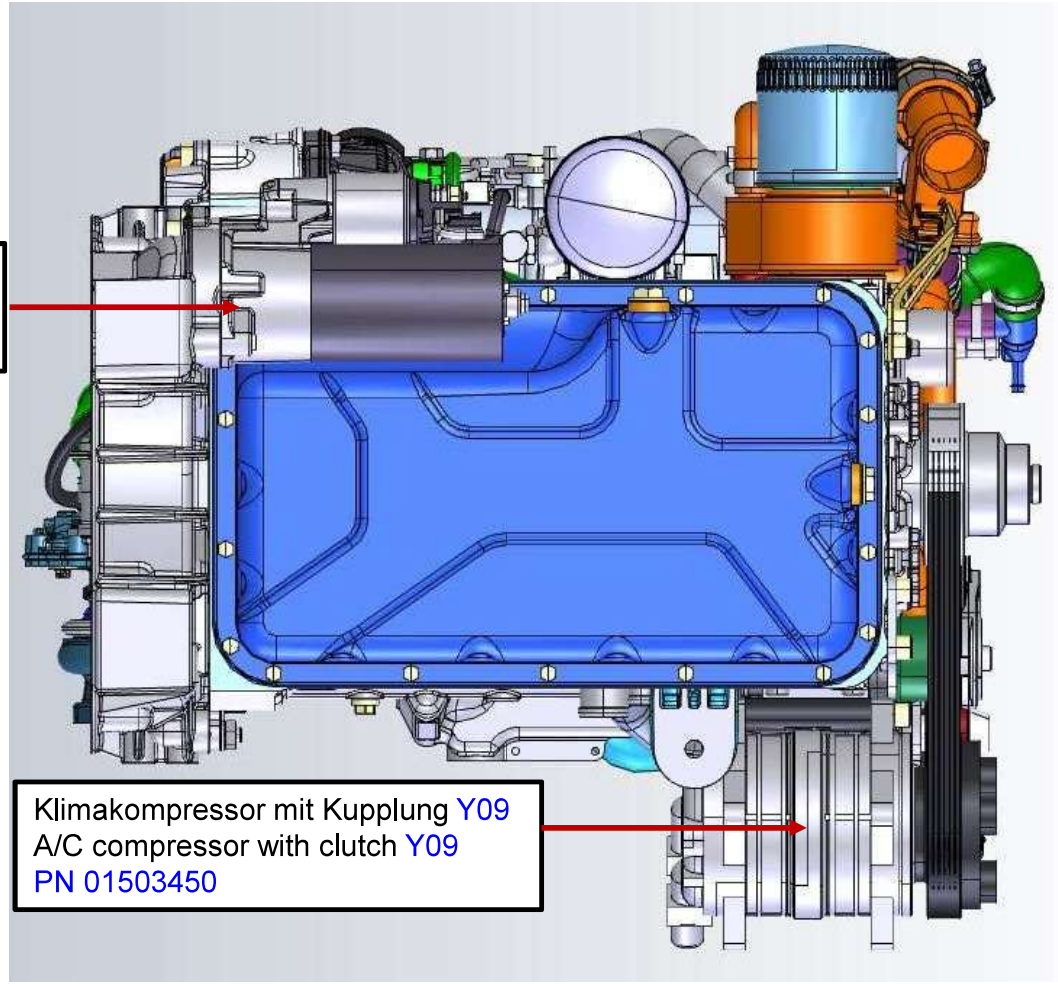

Fahrtrichtung - Driving Direction

Übersicht Motorenteile

DPF

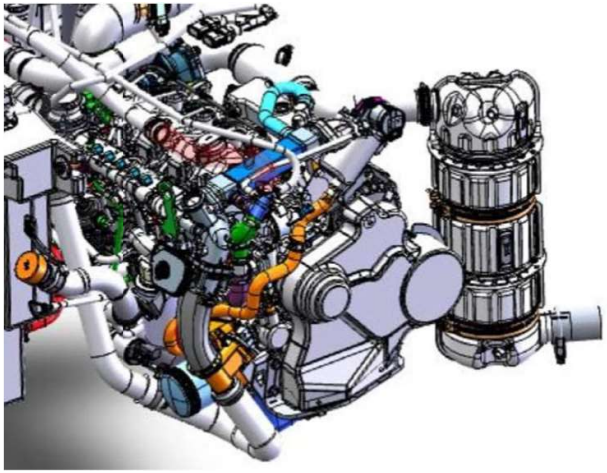

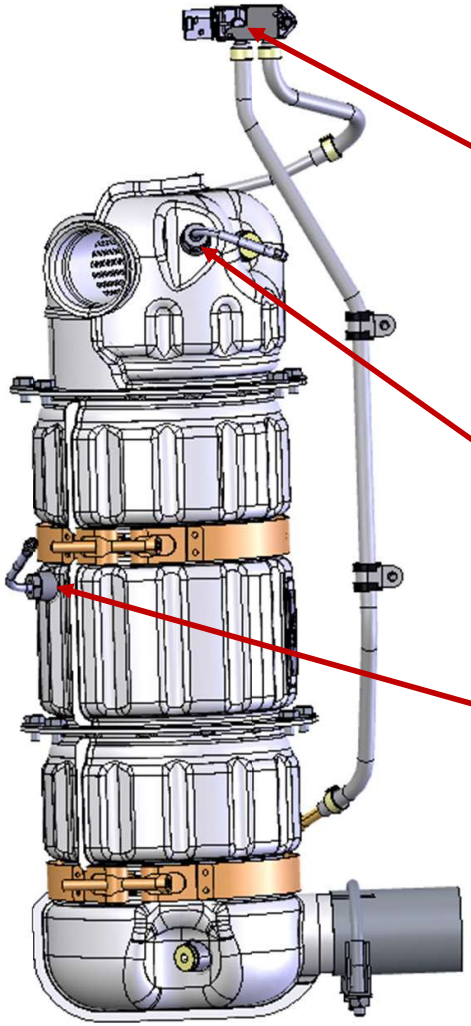

Differenzdruck- Geber DPF B35
Differentioal – Pressure- Sensor DPF B35
PN 01503300

DPF- Abgassensor T1
(Temperatur vor OXI- Kat B36)

DPF- Exhaust Gas Sensor T1
(temperature before OXI- Cat B36 Upstream)
PN 01503300

DPF- Abgassensor T2
(Temperatur nach OXI- Kat B37)

DPF exhaust gas sensor T1
(temperature after to OXI- Cat B37 Downstream)
PN 01503300

Übersicht Motorenteile

Kraftstoff-Niederdrucksystem

Low pressure fuel system

Kraftstoffförderpumpe M10
Fuel Pump M10
PN 01503330

Filterpatrone Kraftstoffvorfilter
mit Wasserabscheider

Filter Catridge Fuel Filter
with Water Separator
PN 01500420

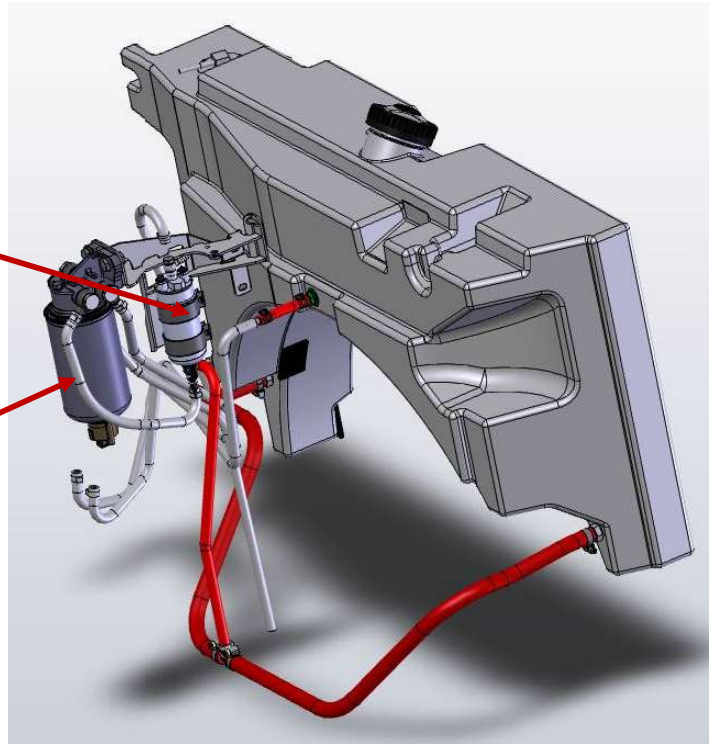

Kraftstoffniederdruck-
und Temperatursensor B3

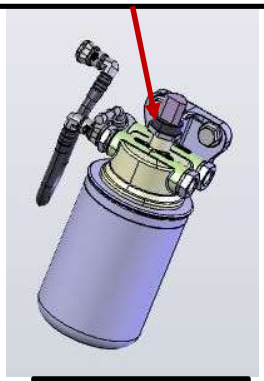

Kraftstofffilter

Sensor Wasser im Kraftstoff B07
Sensor water in the fuel B07
PN 01503360

Übersicht Motorenteile

Ansaugluft

Intake Air

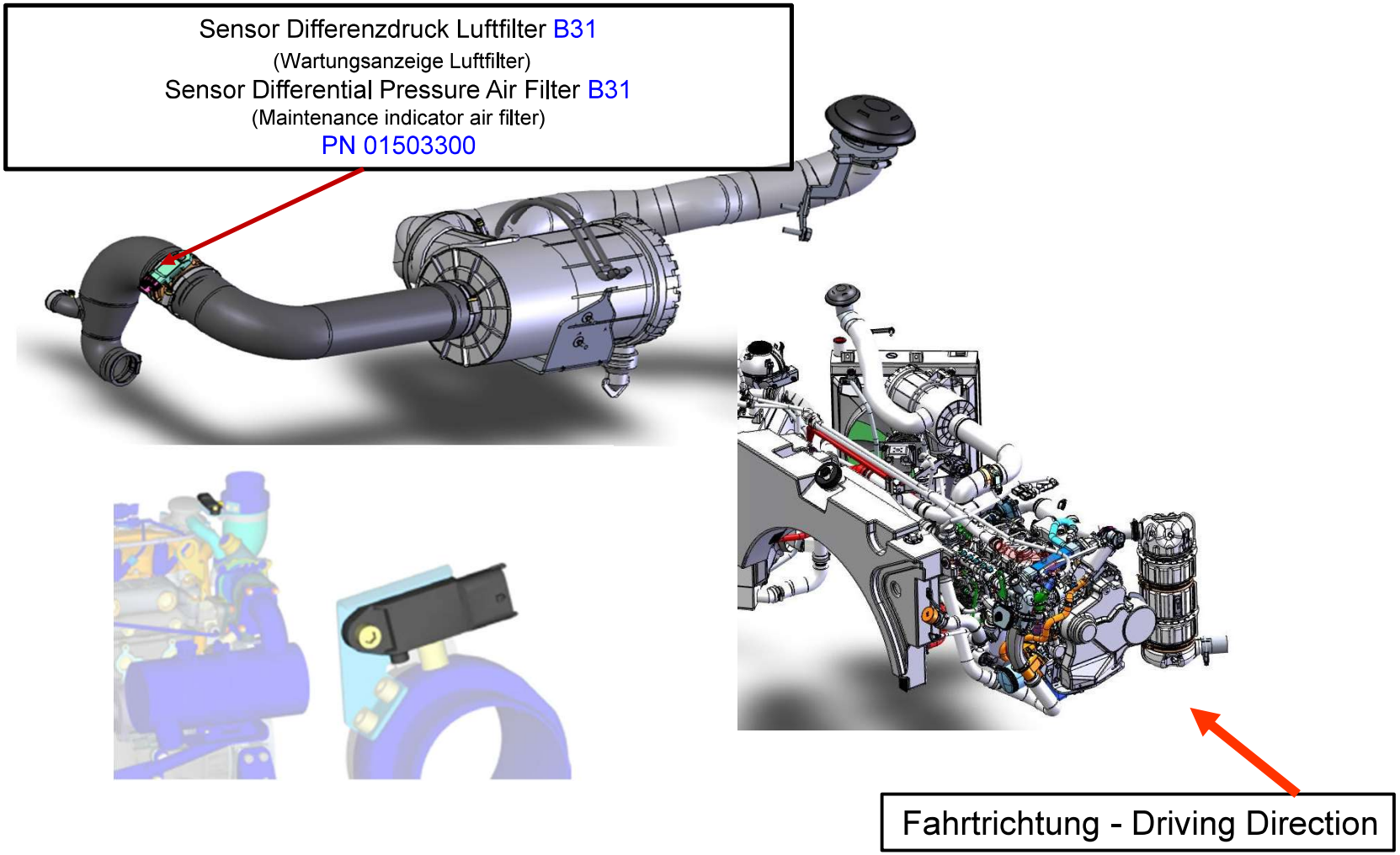

Motorelektrik

Übersicht

Overview

A01/K
94- poliger Stecker Motorsteuergerät
94- pole plug Engine Control Unit

A01/A
60- poliger Stecker Motorsteuergerät
60- pole plug Engine Control Unit

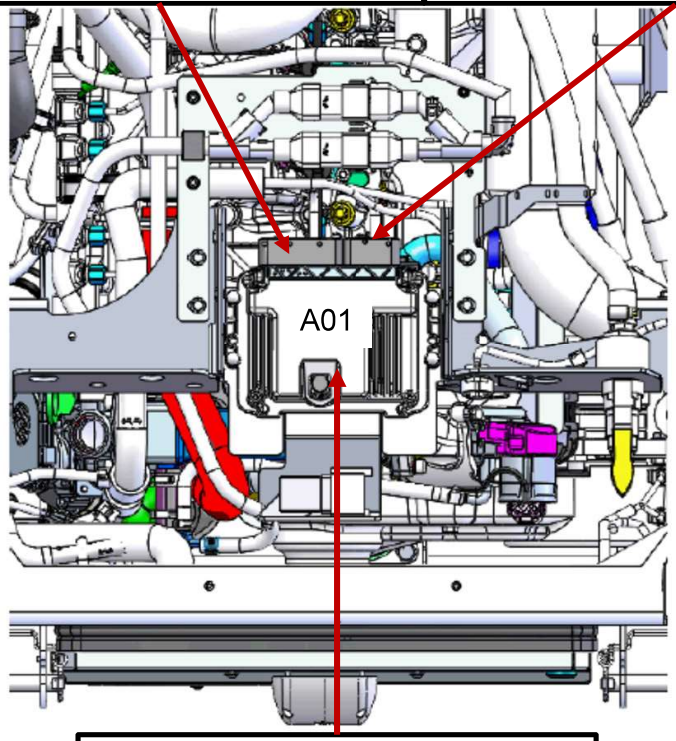

A100 Steuergerät- Glühzeitkontrolle
A100 CU- Pre Glow

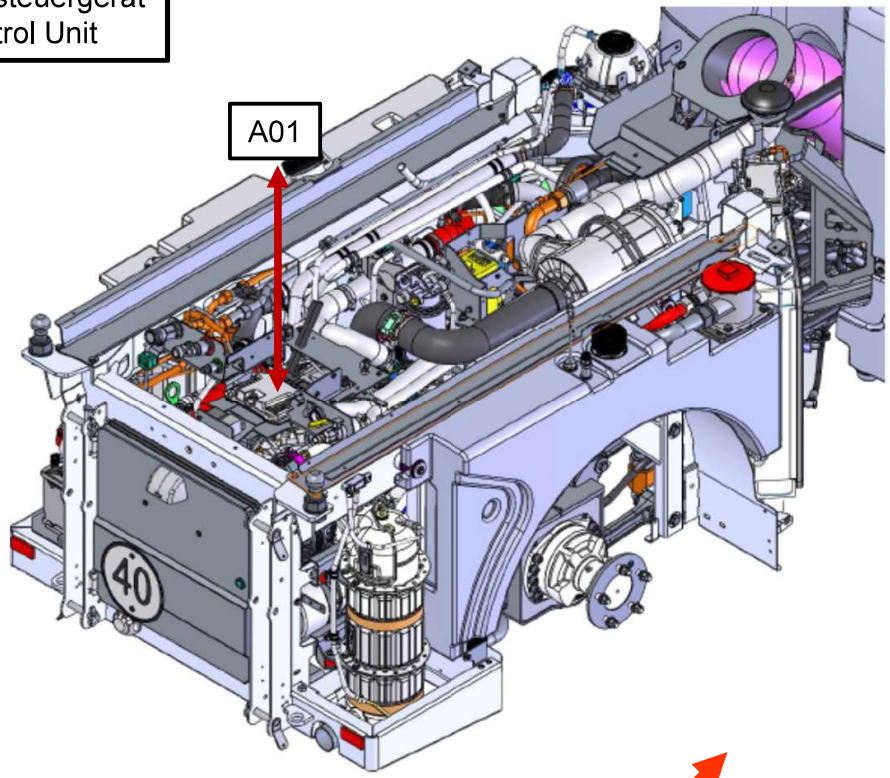

Fahrtrichtung - Driving Direction

Motorelektrik

Übersicht der Sicherungen

Overview of fuses

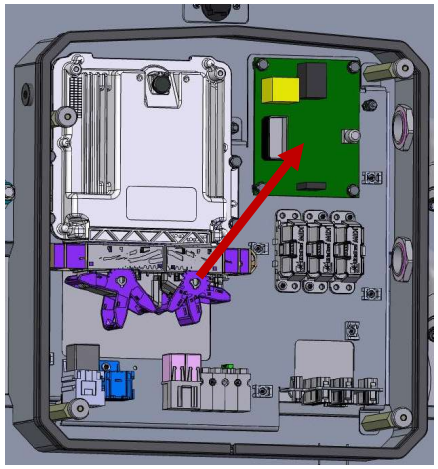

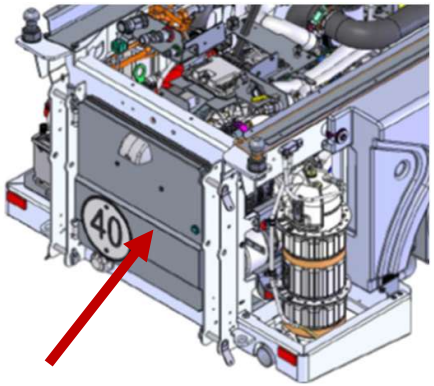

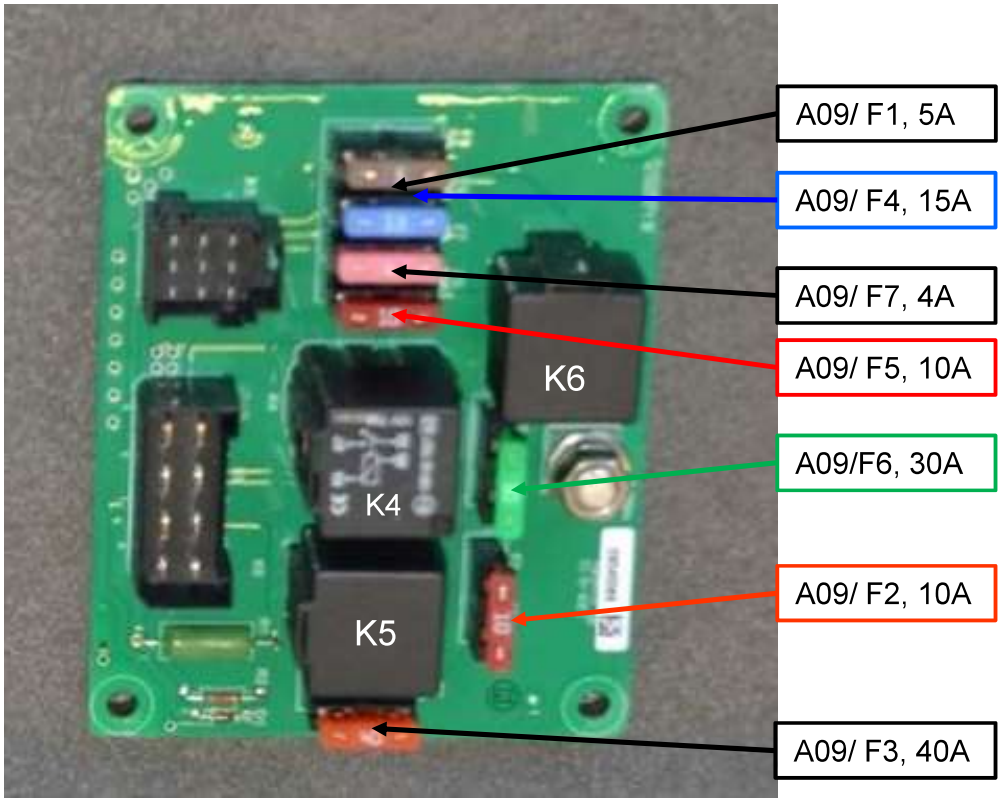

Motorelektrik

Übersicht

Overview

A01/**K**
94- poliger Stecker Motorsteuergerät
94- pole plug Engine Control Unit (ECU)

A01/**A**
60- poliger Stecker Motorsteuergerät
60- pole plug Engine Control Unit (ECU)

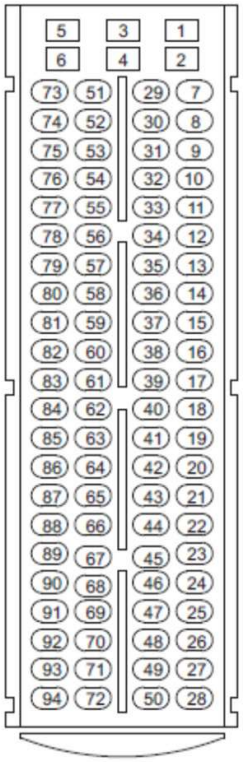

94 poliger Stecker
Motorsteuergerät

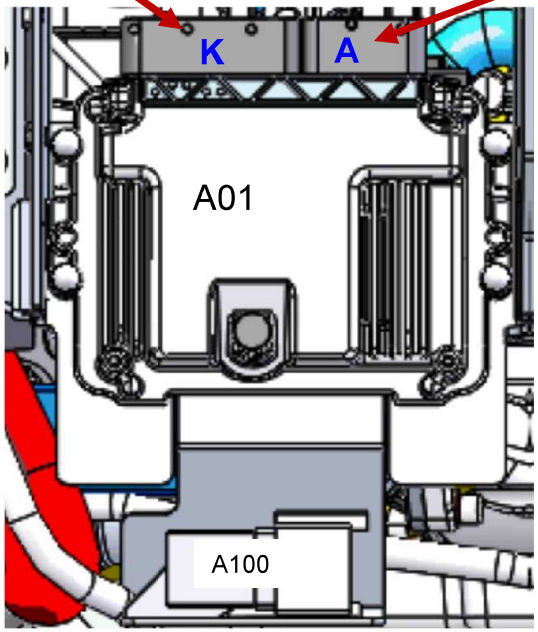

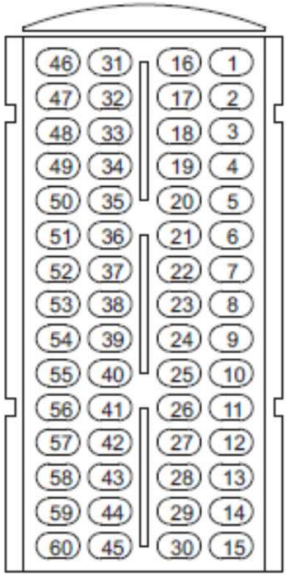

60 poliger Stecker
Motorsteuergerät

Übersicht Stecker am Motor- Steuergerät A01
Overview of plugs (connectors) at engine control unit A01

Motorelektrik

Übersicht

Overview

A01/K
94- poliger Stecker Motorsteuergerät
94- pole plug Engine Control Unit (ECU)

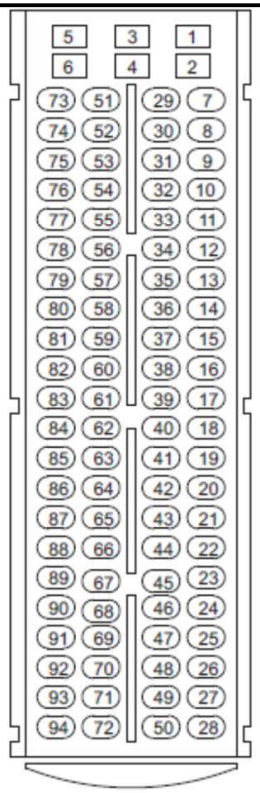

94 poliger Stecker
Motorsteuergerät

Spannungsversorgung HATZ- Motorsteuergerät- A01

Batterie- Plus ,B+, Klemme 30, Kabel- Nr. 3019, von Sicherung F19 (50A), Relais K6:87 (Relais K6 auf der HATZ- Platine A09), Sicherung F4 (Sicherung F4 auf der HATZ- Platine)
an Stecker K, Kontakt- Nr. 1, 3, 5

B+, Klemme 15, Kabel- Nr. 1505, vom Zündschloss S01 (58/ 15) Sicherung F05 (5A)
(Sicherung F05 im Sicherungskasten Seitenkonsole rechts) an Stecker K, Kontakt- Nr. 46

B-, Masse, Klemme 31, von Massepunkt X40 an
Stecker K, Kontakt 2, 4, 6

Power supply HATZ- Engine- Control Unit- A01 (ECU)

Battery Plus, B+, terminal 30, cable no. 3019, from fuse F19 (50A), relay K6:87 (relay K6 on HATZ board A09), fuse F4 (fuse F4 on HATZ board)
to connector K, contact no. 1, 3, 5

Battery Plus, B+, terminal 15, cable- no. 1505, from ignition lock S01 (58/ 15) fuse F05 (5A)
(fuse F05 in the fuse box on the right-hand side of the side console) to connector K, contact no. 46

B-, ground, terminal 31, from ground point X40 to
Plug K, contact 2, 4, 6

A10- Sicherungskasten – A10 Fuse Box

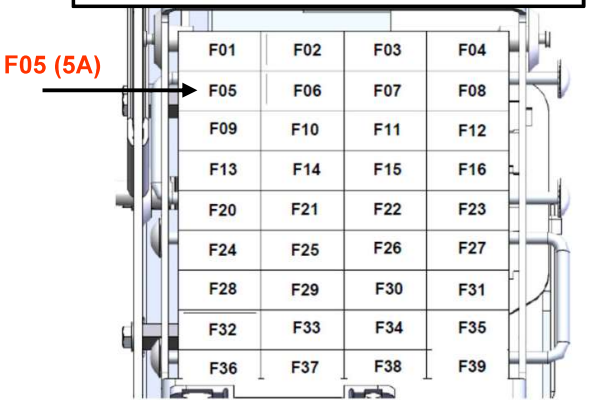

Motorelektrik

Übersicht

Overview

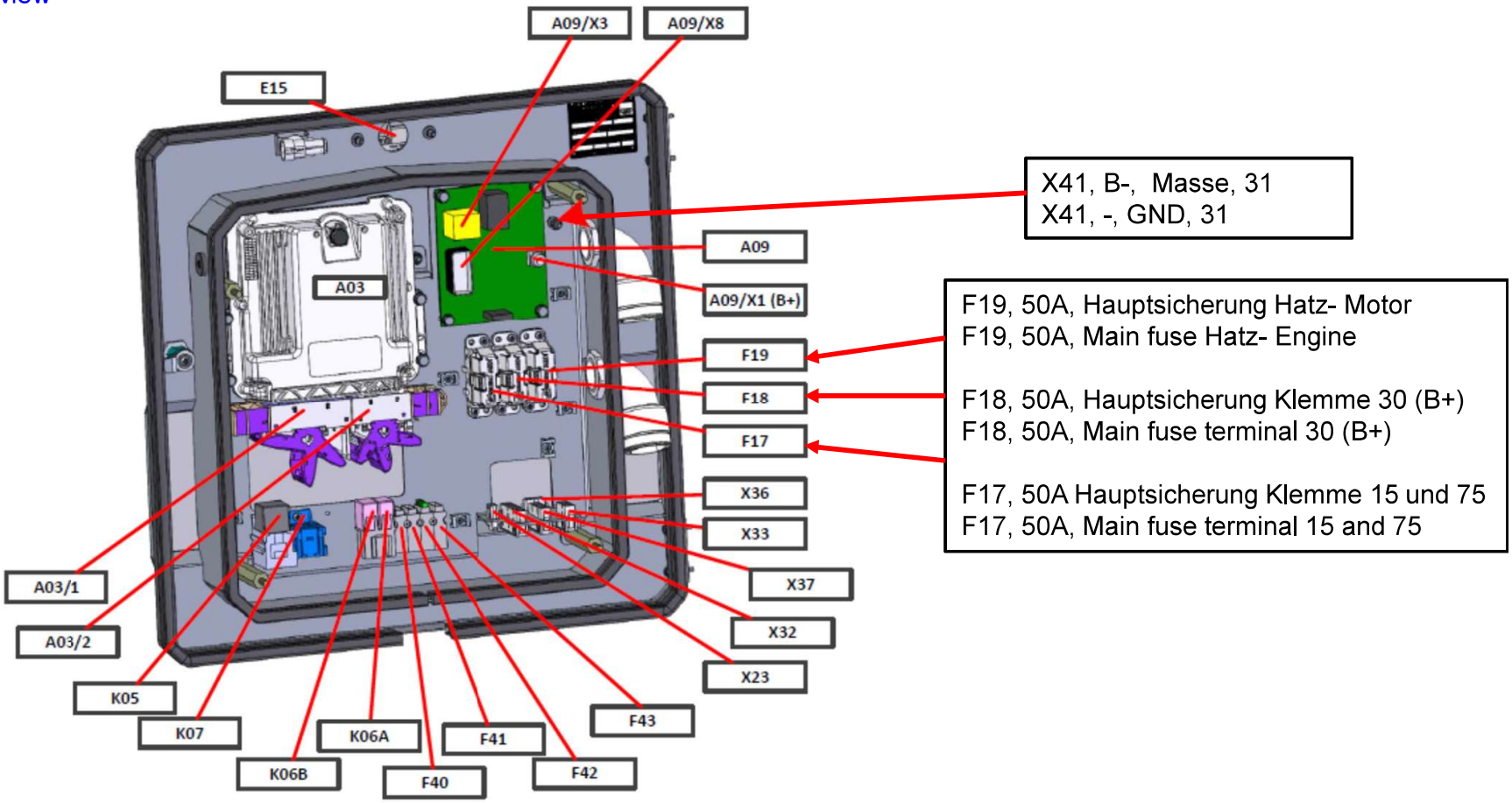

Motorelektrik

Übersicht

Overview

Übersicht E- Platine A09- HATZ- Motor,
Overview Electric- Board A09- HATZ- Engine
PN 01503850

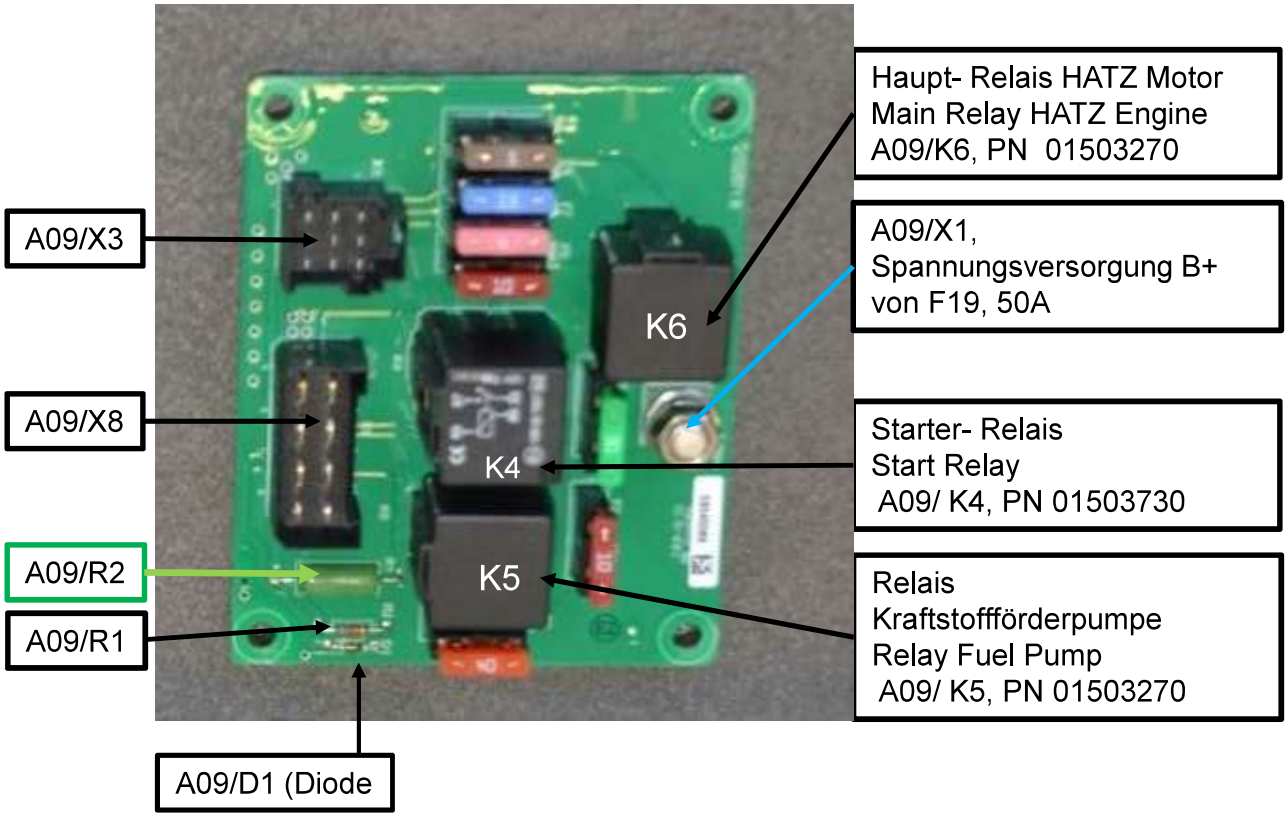

Motorelektrik

Übersicht

Overview

Übersicht E- Platine A09- HATZ- Motor
Overview Electric- Board A09- HATZ- Engine
PN 01503850

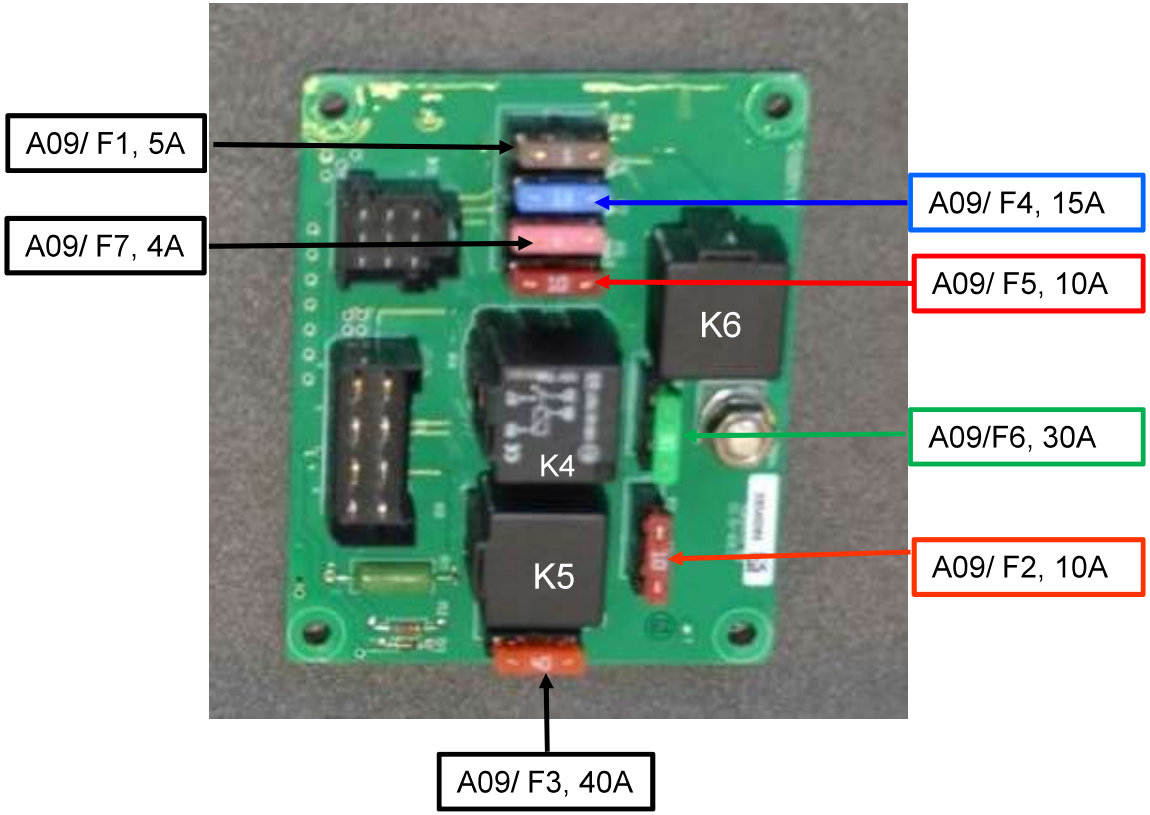

Motorelektrik

Übersicht

Overview

Übersicht der Motorsicherungen auf der Motorplatine A09

F1 = Spannungsversorgung Hatz Diagnosestecker X59, **5A**
F2 = Spannungsversorgung Kraftstoffpumpe M10, **10A**
F3 = Hauptsicherung Glühzeitsteuergerät A100, **40A**
F4 = Spannungsversorgung Motorsteuergerät A01, **15A**
F5 = Spannungsversorgung Wasser im Kraftstoffsensor B33, **10A**
F6 = Sicherung Magnetschalter Anlasser M01, **30A**
F7 = Freigabe Glühzeitsteuergerät A100, **4A**

Overview of the motor fuses on the motor board A09

F1 = Power supply Hatz diagnostic connector X59, **5A**
F2 = Power supply fuel pump M10, **10A**
F3 = Main fuse glow time control unit A100, **40A**
F4 = Power supply motor control unit A01, **15A**
F5 = Power supply water in fuel sensor B33, **10A**
F6 = Fuse magnetic switch starter M01, **30A**
F7 = Release glow time control unit A100, **4A**

Motorkabelsatz

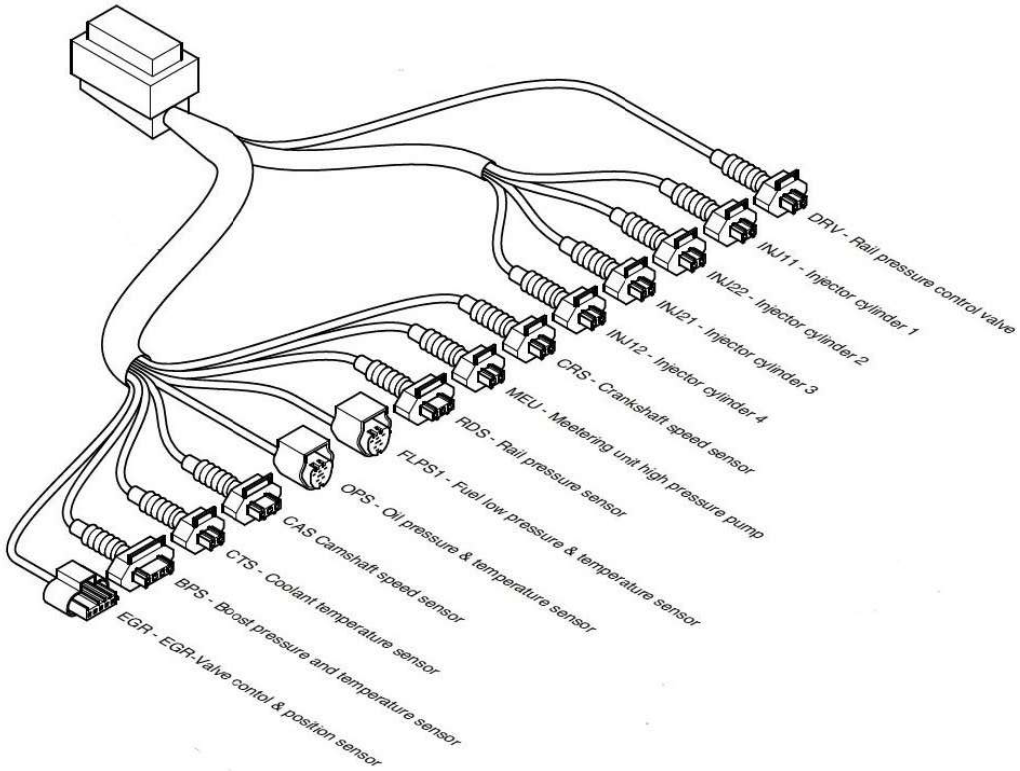

Motorkabelsatz

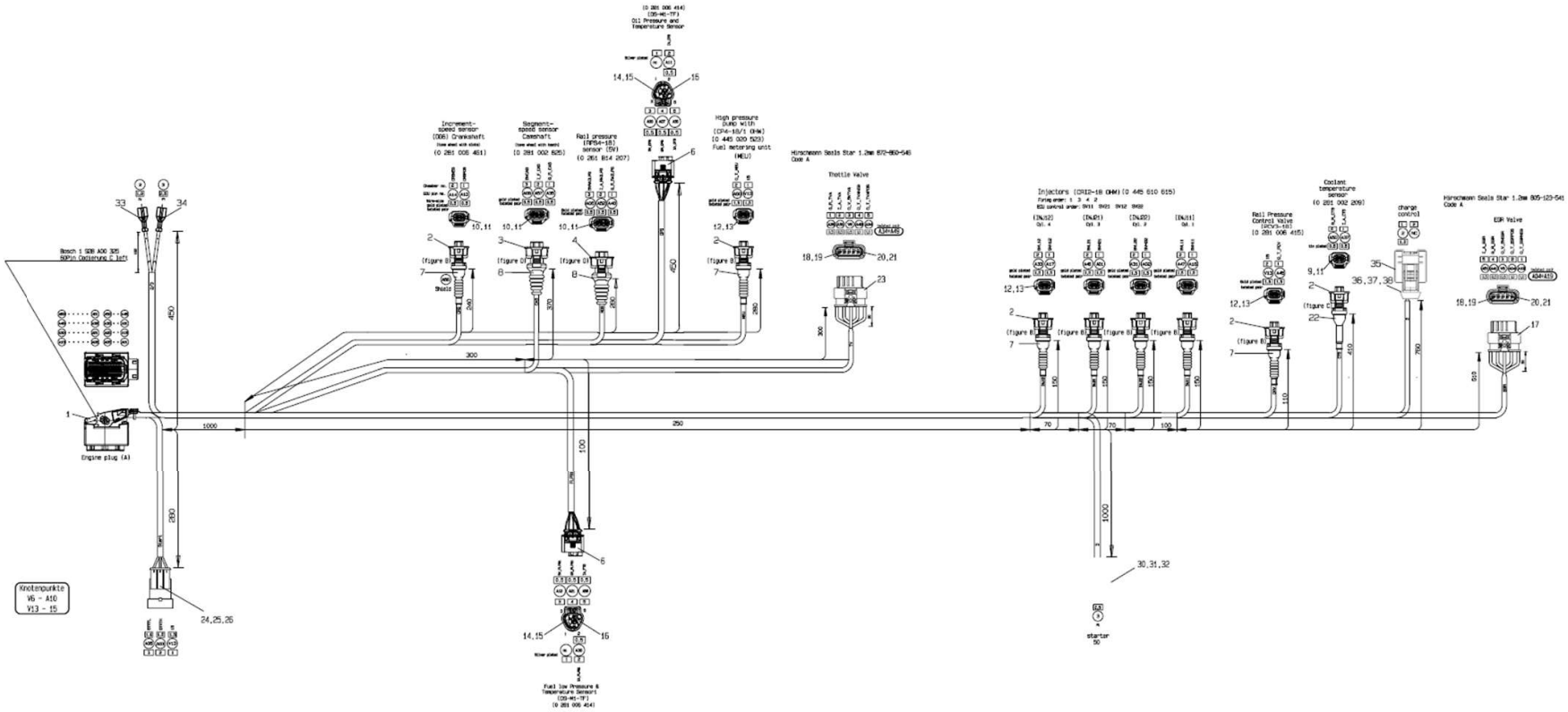

Motorkabelsatz

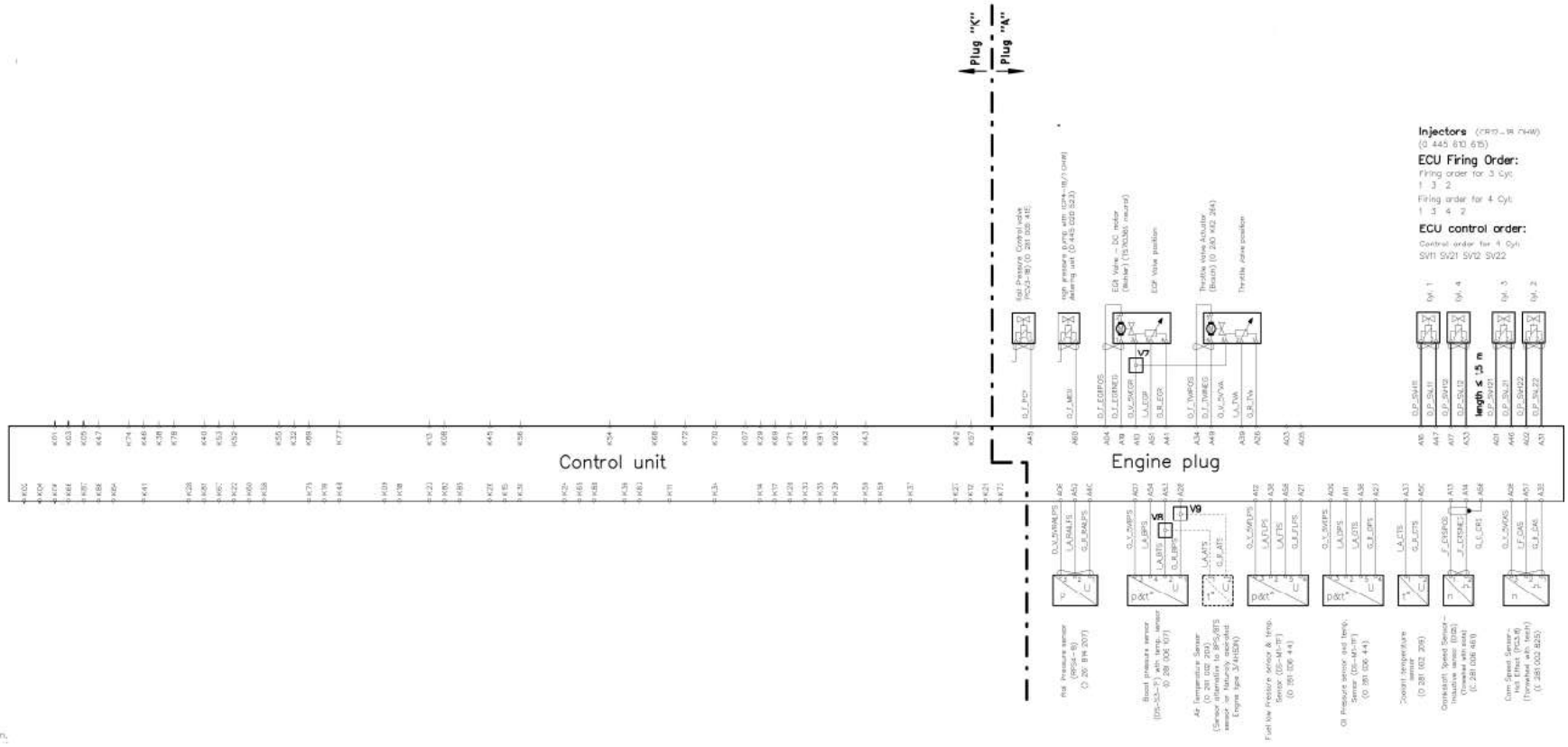

Motorelektrik

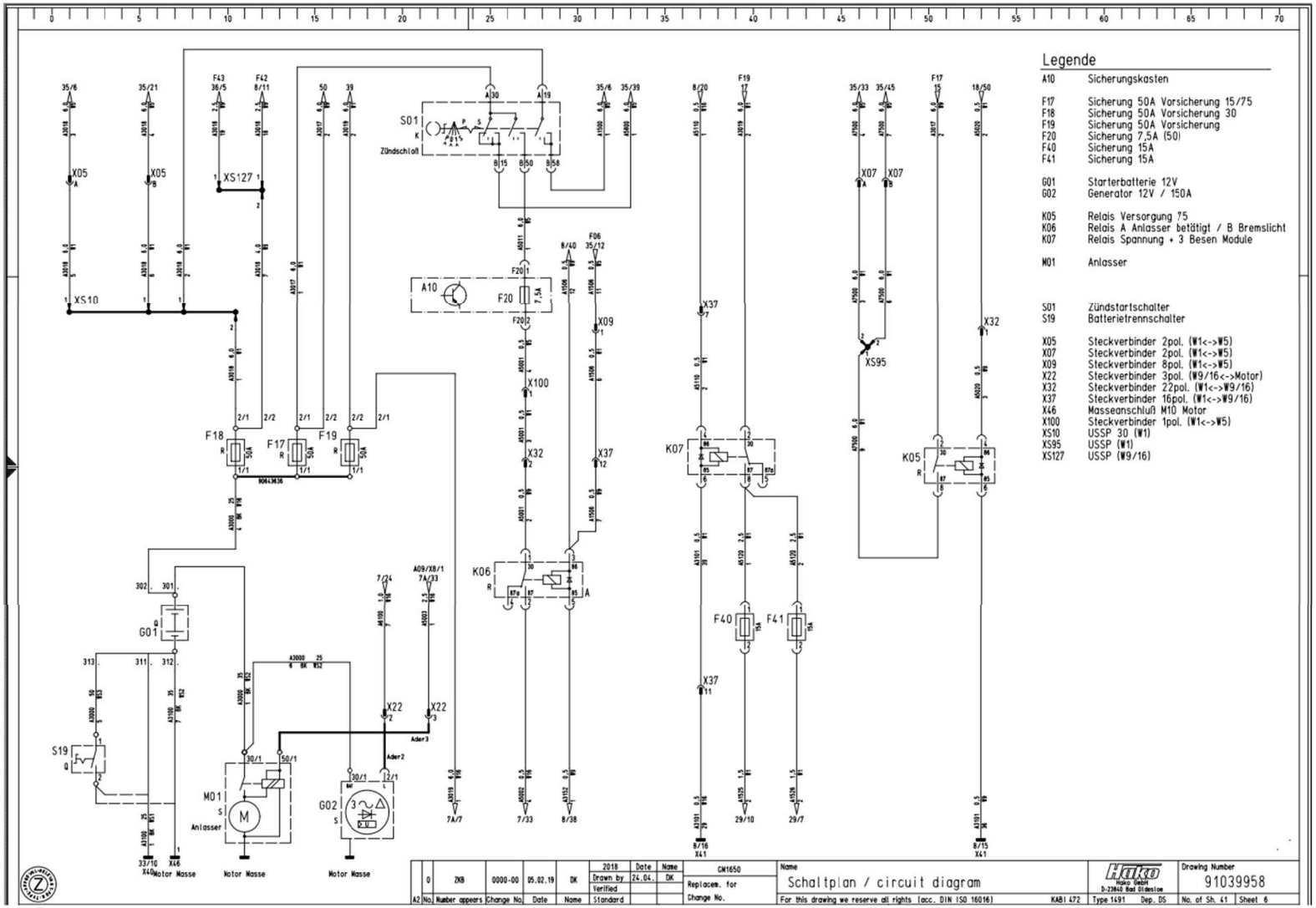

Motorelektrik

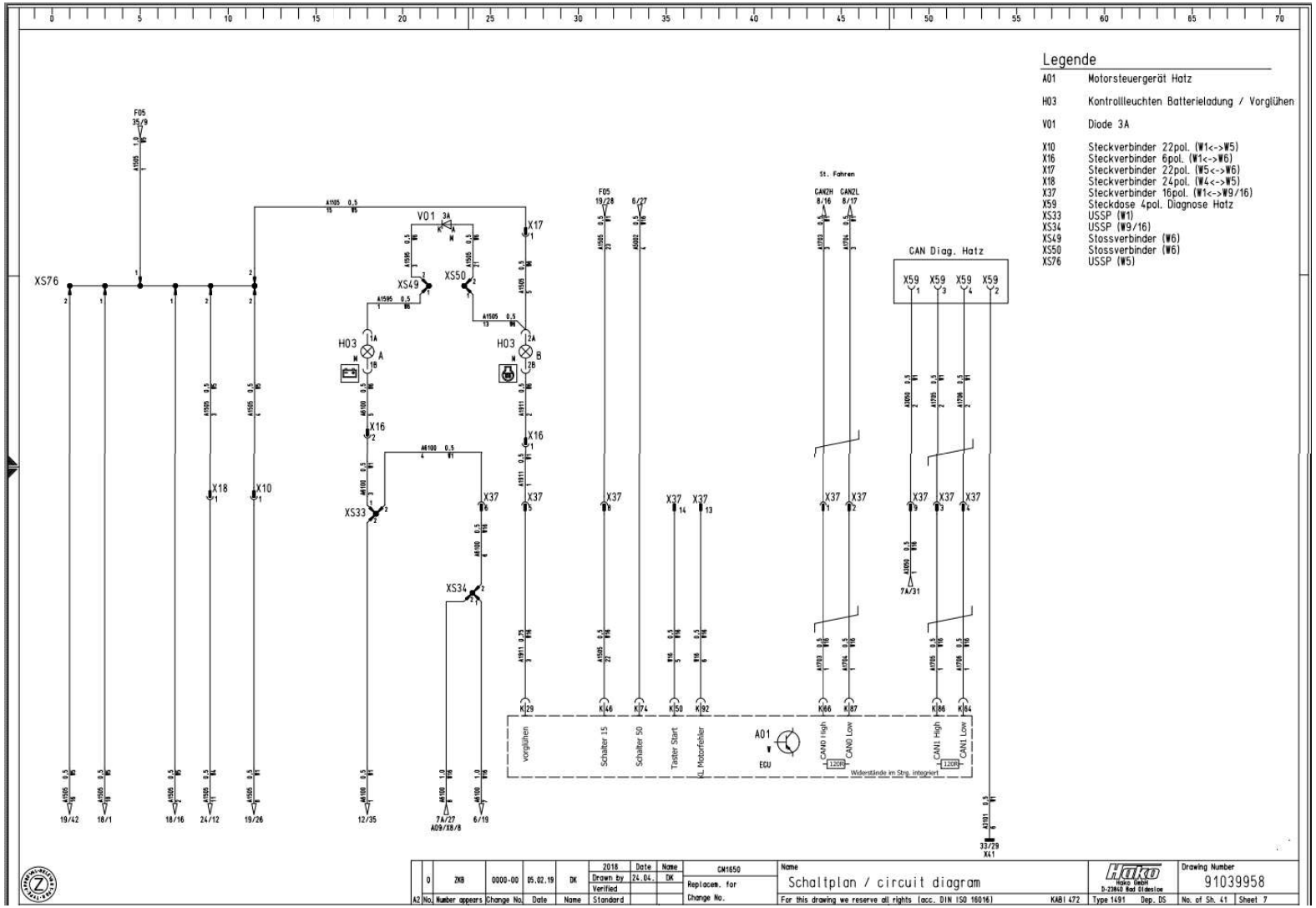

Motorelektrik

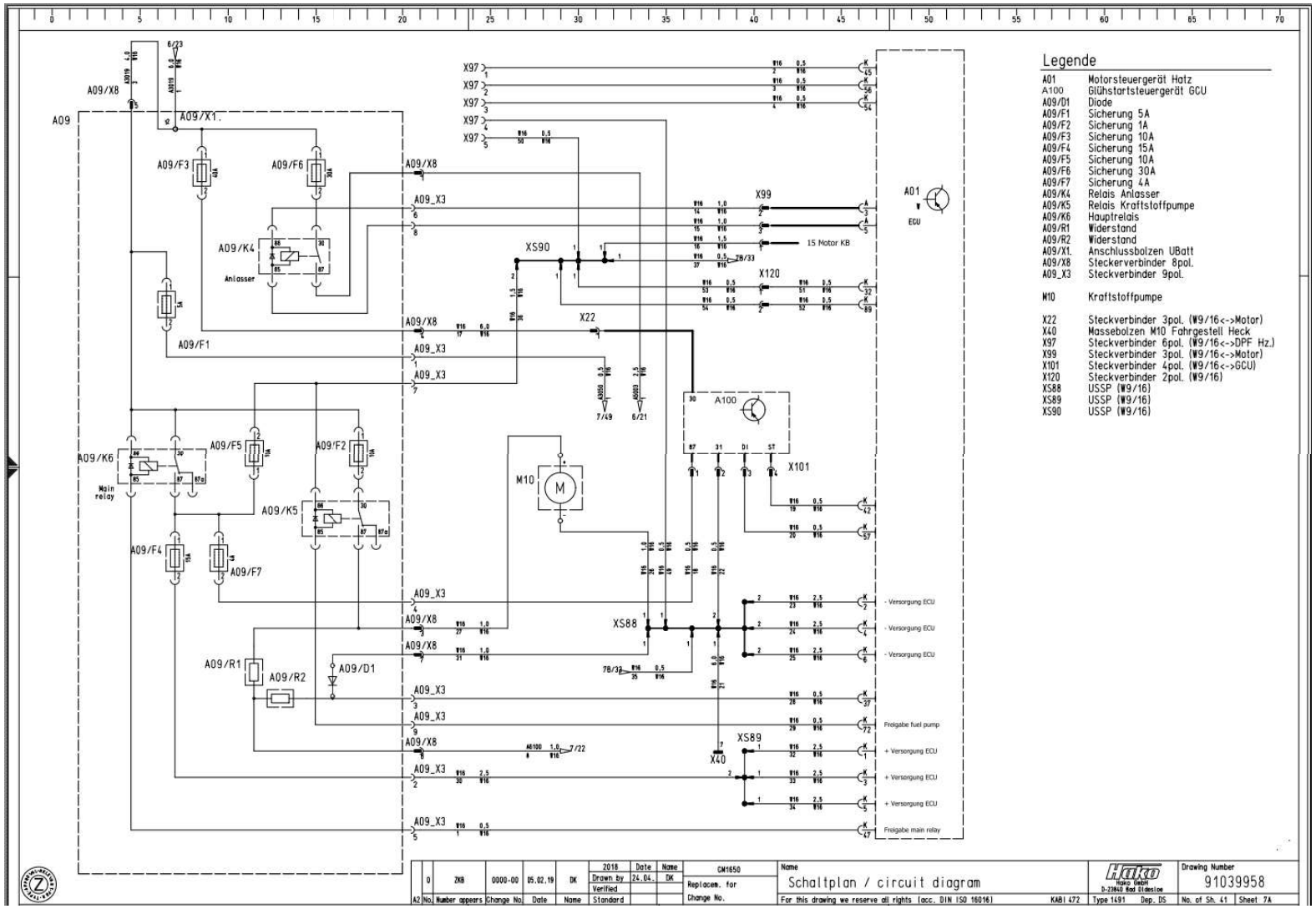
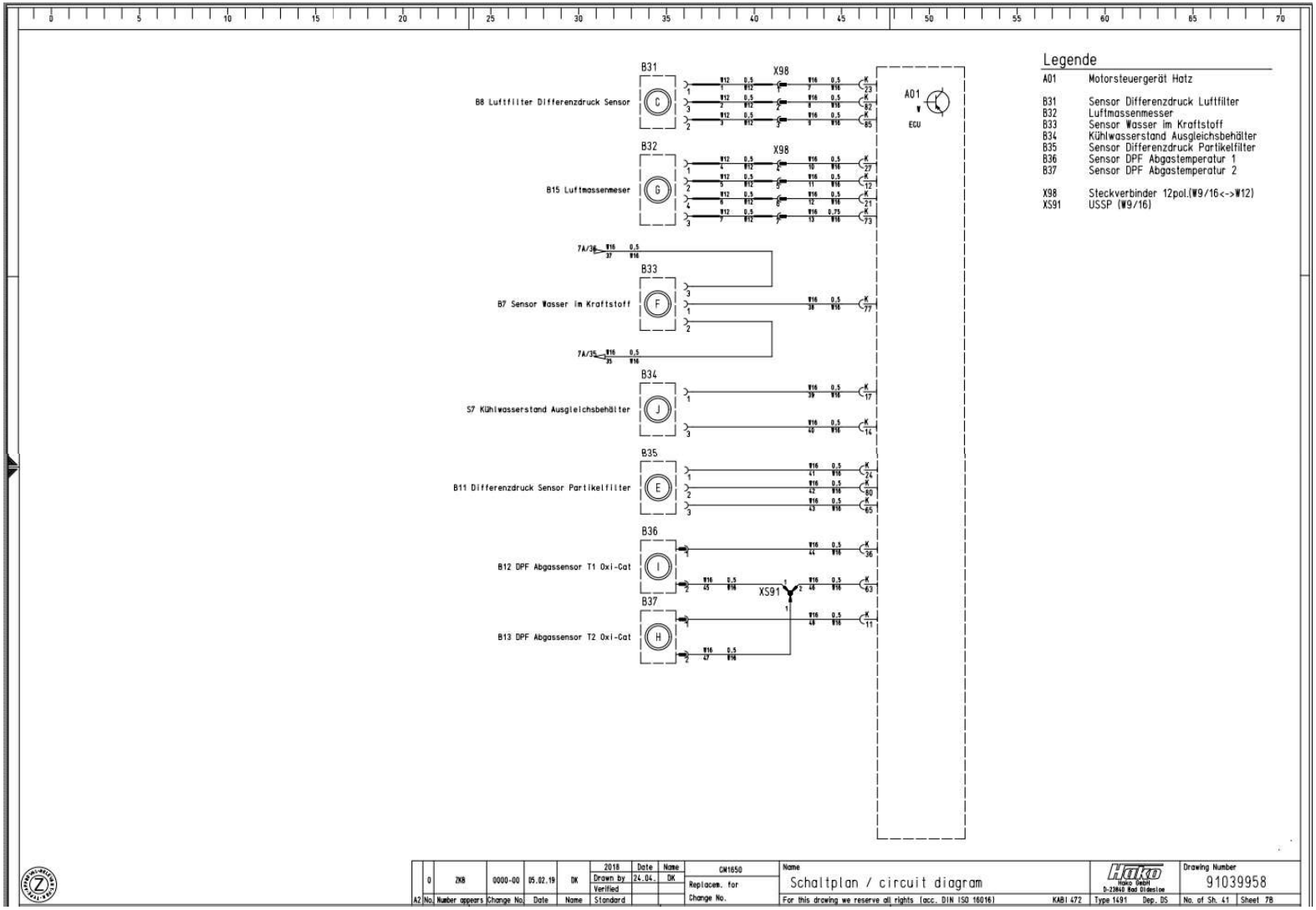
Motorelektrik