0202 INJECTION PUMP

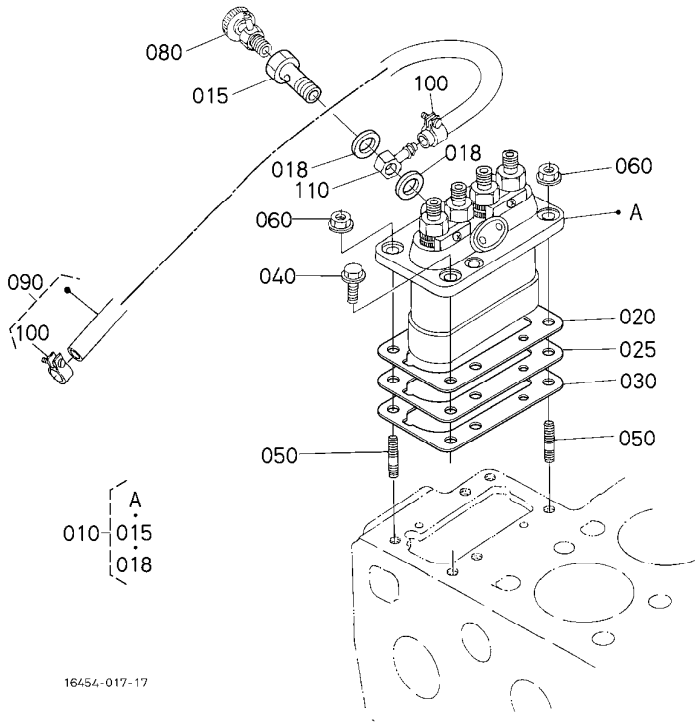

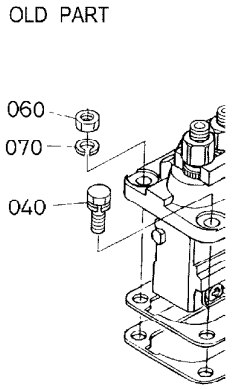

A:V1902-BG1-SAE-1 B:V1902-BG1-SAE-2

REF.No.	PART No.	PART NAME	Q'TY/S.No. A	Q'TY/S.No. B	I.C.	REMARKS
010	19202-5101-0	ASSY PUMP, INJECTION	1	1		
015	15471-5132-0	SCREW, HOLLOW	1	1		
018	15401-9665-0	GASKET	2	2		
020	19077-5209-2	SHIM	1	1		0.20mm
025	19077-5211-3	SHIM, INJECTION PUMP	1	1		0.25mm
030	15471-5211-0	SHIM	2	2		0.30mm
040	01123-50822	BOLT	4 <=4X9999	4 <=5V9999		#
040	01754-50820	BOLT, FLANGE	4 >=4Y0001	4 >=4Y0001	←	#
050	19818-9153-0	STUD	2	2		
060	02156-50080	NUT	2 <=5V9999	2 <=5V9999		#
060	02751-50080	NUT, FLANGE	2 >=4Y0001	2 >=4Y0001	≠	#
070	04512-60080	WASHER, SPRING	2 <=5V9999	2 <=5V9999		#
080	14311-6050-4	ASSY COCK, JET START	1	1		
090	14681-4201-0	ASSY PIPE, FUEL	1	1		
100	14301-4275-0	CLIP, PIPE	2	2		
110	15401-9569-0	JOINT, EYE	1	1		

↔ Interchangeable; ≠ not interchangeable; ← new for old; → old for new